OLEODINAMICA BORELLI
HYDRAULIC COMPONENTS

catalogo INNESTI ELETTROMAGNETICI

INNESTI ELETTROMAGNETICI SERIE 30900

Per ottenere i valori richiesti di coppia nominale degli INNESTI ELETTROMAGNETICI bisogna sottoporli ad una fase di rodaggio. Il completamento del rodaggio si riferisce a più operazioni di "Innesto" e "Disinnesto" della frizione ad elevata velocità con la pompa in scarico. Importante controllare nella fase di montaggio che sulle superfici di trascinamento della puleggia non vi siano presenti tracce di olio, o grasso o altre sostanze untuose, ma devono essere perfettamente pulite.
Il montaggio di elettrofrizioni, con frangia per trascinamento frontale su unità, occorre controllare l'esatto allineamento dell'accoppiamento. L'applicazione delle frizioni elettromagnetiche non deve superare la coppia nominale perché si determinerebbe uno slittamento delle superfici di contatto; questa fase non deve durare oltre 5 secondi, perché le bobine potrebbero bruciare.

EMBRAYAGES ÉLECTROMAGNÉTIQUES SERIE 30900

Pour obtenir les valeurs requises de couple nominal des embrayages électromagnétiques, il faut les soumettre à une phase de rodage. Le rodage se compose de plusieurs opérations d'embrayages et de débrayage à vitesse élévée avec la pompe en décharge. Au cours de la phase de montage, il est important de contrôler qu'il n'y ait pas de traces d'huile ni de graisse ni d'autres substances graisseuses sur les surfaces d'entraînement de la poulie; elles doivent être parfaitement propres.
Pour le montage d'électro-embrayages avec bride pour entraînement frontal sur des unités, il faut vérifier que l'alignement de l'accouplement soit parfait. L'application des embrayages électromagnétiques ne doit pas dépasser le couple nominal car cela entraînerait un patinement des surfaces de contact; cette phase ne doit pas durer plus de 5 secondes car les bobines pourraient se brûler.

ELECTROMAGNETIC COUPLINGS SERIES 30900

Running-in is required to obtain the desired ratad torque values of electromagnetic couplings. Running-in is carried out by engaging and disengaging clutch at high speed several times with the pump in exhaust position.
During assembly, make sure that there are no oil or grease traces on pulley surfaces whith must be completely clean.
When assemblying electric clutches with front driving flange, check for proper coupling alignment, but do not exceed rated torque because this would cause slippage of contact surface. This stage must not last more than 5 secs since coils could burn.

MAGNETKUPPLUNGEN SERIE 30900

Um mit den Magnetkupplungen auf die gewünschten Nenndrehmomente zu kommen, müssen die Magnetkupplungen einer Einlaufphase unterzogen werden. Das Einlaufen der Magnetkupplung erfolgt durch mehrmalige Ein-/Auskupplungen bei ausgekuppelter Kupplung und unbelasteter Pumpe. Bei der Montage ist es äusserst wichtig sicherzustellen, daß in der Mitnahmerille der Riemenscheibe keine Öltropfen, Körner oder andere ölige Substanzen vorhanden sind. Die Riemenscheibe muß einwandfrei sauber sein.
Bei der Montage von Magnetkupplungen mit Flansch für stirnseitige Montage, muß sichergestellt werden, daß das Aggregat genaustens in der Achse gefluchtet ist.
Beim Einsatz der Magnetkupplungen muß ausserdem gewährleistet sein, daß das vorgeschriebene Nenndrehmoment nicht überschritten wird, da ansonsten die Kontaktflächen zu lange schleifen; diese Phase darf nicht über 5 s dauern, da ansonsten di Wicklungen durchbrennen.

• TAVOLA RICAMBI INNESTO ELETTROMAGNETICO 3daNm

• TABLEAU DES PIECES DETACHEES POUR EMBRAYAGE ELECTROMAGNETIQUE 3 daNm

• SPARE PARTS TABLE FOR ELECTROMAGNETIC COUPLING 3 daNm

• ERSAZTEILLISTE FUR ELEKTROMAGNETISCHE SCHALTKUPPLUNGEN 3daNm

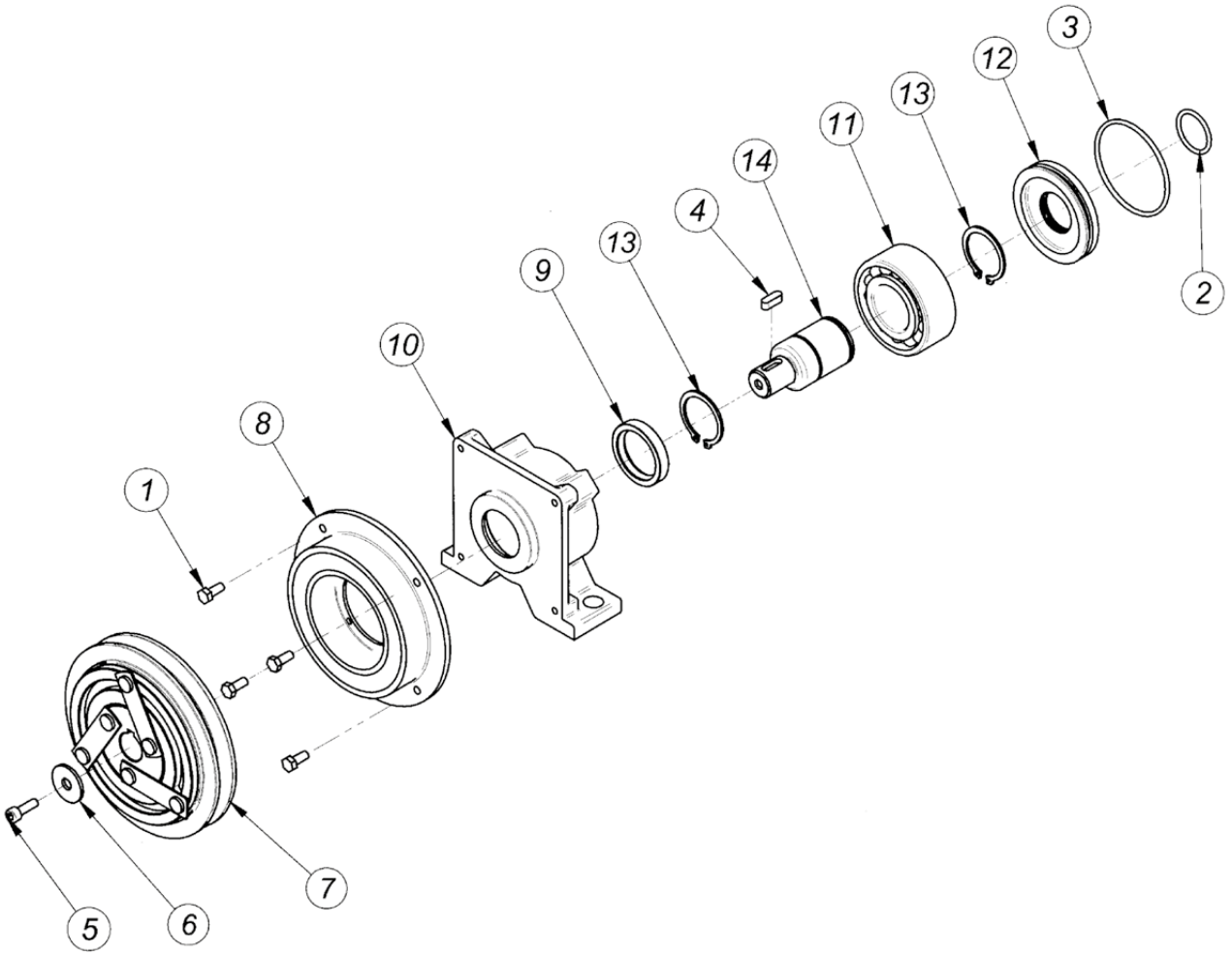

Pos.	CODICE	DENOMINAZIONE	DENOMINATION	DESCRIPTION	BEZEICHNUNG	Q.TA'
1	620512	Vite EN 24017 M5x12	Vis EN 24017 M5x12	Socket EN 24017 M5x12	Befestigungsschraube EN 24017 M5x12	4
2	402100	Anello OR	Bague torique	O-Ring	O-Ring	1
3	403225	Anello OR D.60	Bague torique d.60	O-Ring d.60	O-Ring d.60	1
4	435515	Linguetta UNI 6604 A 5x5x20	Languette UNI 6604 5x5x20	Woudruff key UNI 6604 5x5x20	Halbrundkeil UNI 6604 5x5x20	1
5	610620	VTCEI UNI 5931 M6x12	Vis TCHC UNI 5931 M6x12	Socket capscrew UNI 5931 M6x12	Befestigungsschraube UNI 5931 M6x12	1
6	RSP246	Rosetta UNI 6593 - 6x24x2	Rondelle UNI 6593 - 6x24x2	Washer UNI 6593 - 6x24x2	Rosette UNI 6593 - 6x24x2	1
7	4003/125BP	Puleggia elettrofrizione	Poulie embrayage électrique	Electric clutch pulley	Elektroschaltkupplungsscheibe	1
8	401203-125B 402403/125B	Bobina	Bobine	Coil	Zundspüle	1
9	303040	Anello di tenuta 30x40x7	Bague d'etancheite 30x40x7	Sealing ring 30x40x7	Dichtring 30x40x7	1
10	30009/3	Scatola	Carcasse	Housing	Gehause	1
11	503206	Cuscinetto SKF 3206	Palier SKF 3206	Bearing SKF 3206	Kugellager SKF 3206	1
12	COP-062	Anello	Bague	Ring	Ring	1
13	903000	Anello elastico UNI 7436 - 25	Circlip UNI 7436 - 25	Snap ring UNI 7436 - 25	Seegerring UNI 7436 - 25	2
14	AC30900	Albero	Arbre	Shaft	Welle	1

• INNESTO ELETTROMAGNETICO 3 daNm
• EMBRAYAGE ELECTROMAGNETIQUE 3 daNm
• ELECTROMAGNETIC COUPLING 3 daNm
• ELEKTROMAGNETISCHE SCHALTKUPPLUNGEN 3 daNm

SERIE: 30900-1 12 Volt
SERIE: 30900-2 24 Volt

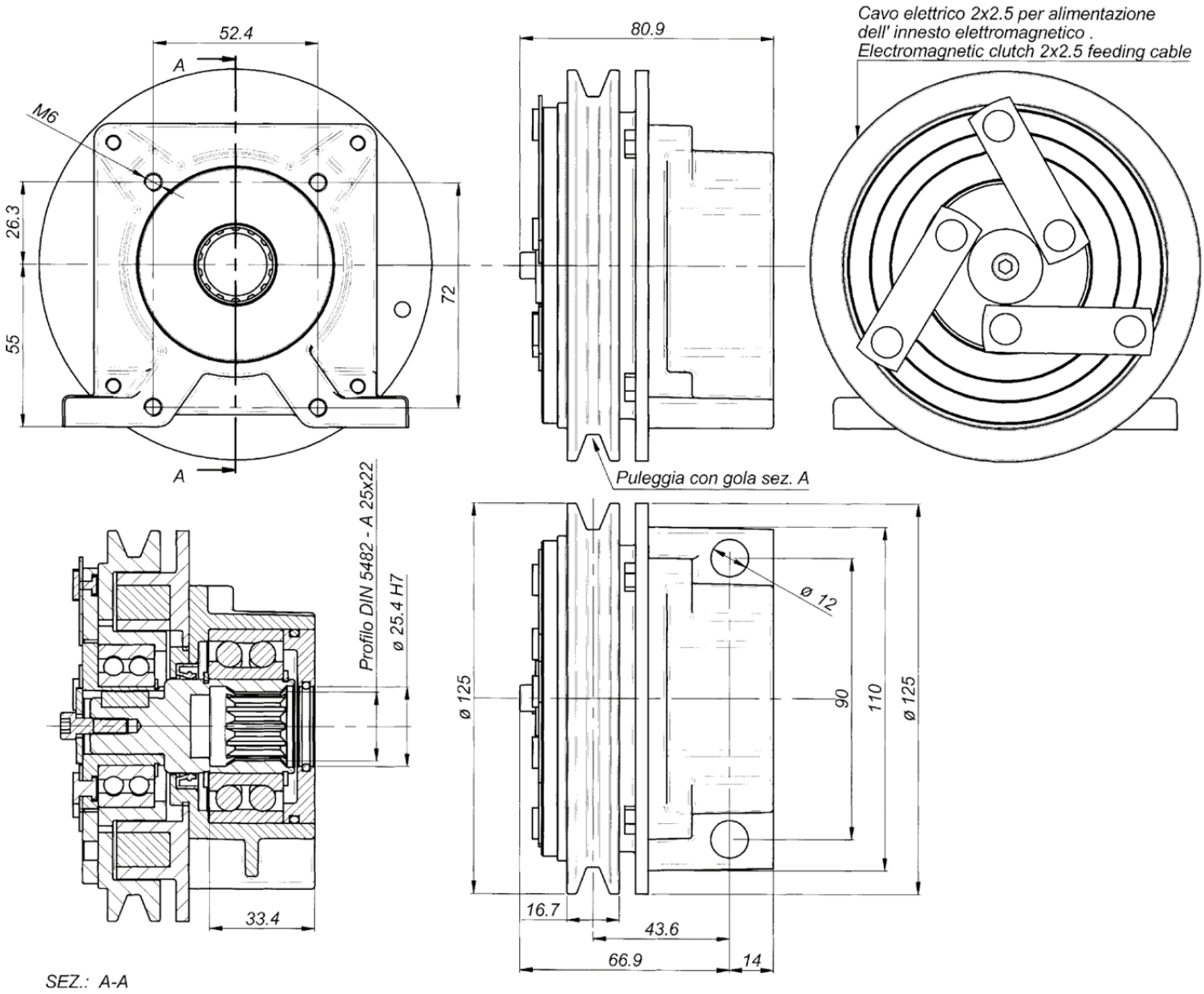

Nominal torque	3,0 daNm		Connection time	25 m/sec
Static torque	4,5 daNm		Disconnection time	40 m/sec
Dynamic torque	3,2 daNm	at 500 rpm	Minimun time between two connection	20 sec
	2,8 daNm	at 1000 rpm		
	1,7 daNm	at 1500 rpm		
	1,4 daNm	at 2000 rpm		
	1,2 daNm	at 2500 rpm	Max speed	5000 rpm
	0,9 daNm	at 3000 rpm	Weight	3 Kg

Electric absorption	Resistance (W)		Current (A)		Power (W)	
	20° C	120° C	20° C	120° C	20° C	120° C
12 V DC	5,7	7,9	2,1	1,6	25,2	18
24 V DC	21,7	30,7	1,1	0,8	26,5	19

All technical data are at 20°C / at 120° C the performance are less 20%
All electromagneteic clutches are reversible.

• TAVOLA RICAMBI INNESTO ELETTROMAGNETICO 3daNm

• TABLEAU DES PIECES DETACHEES POUR EMBRAYAGE ELECTROMAGNETIQUE 3 daNm

• SPARE PARTS TABLE FOR ELECTROMAGNETIC COUPLING 3 daNm

• ERSAZTEILLISTE FUR ELEKTROMAGNETISCHE SCHALTKUPPLUNGEN 3daNm

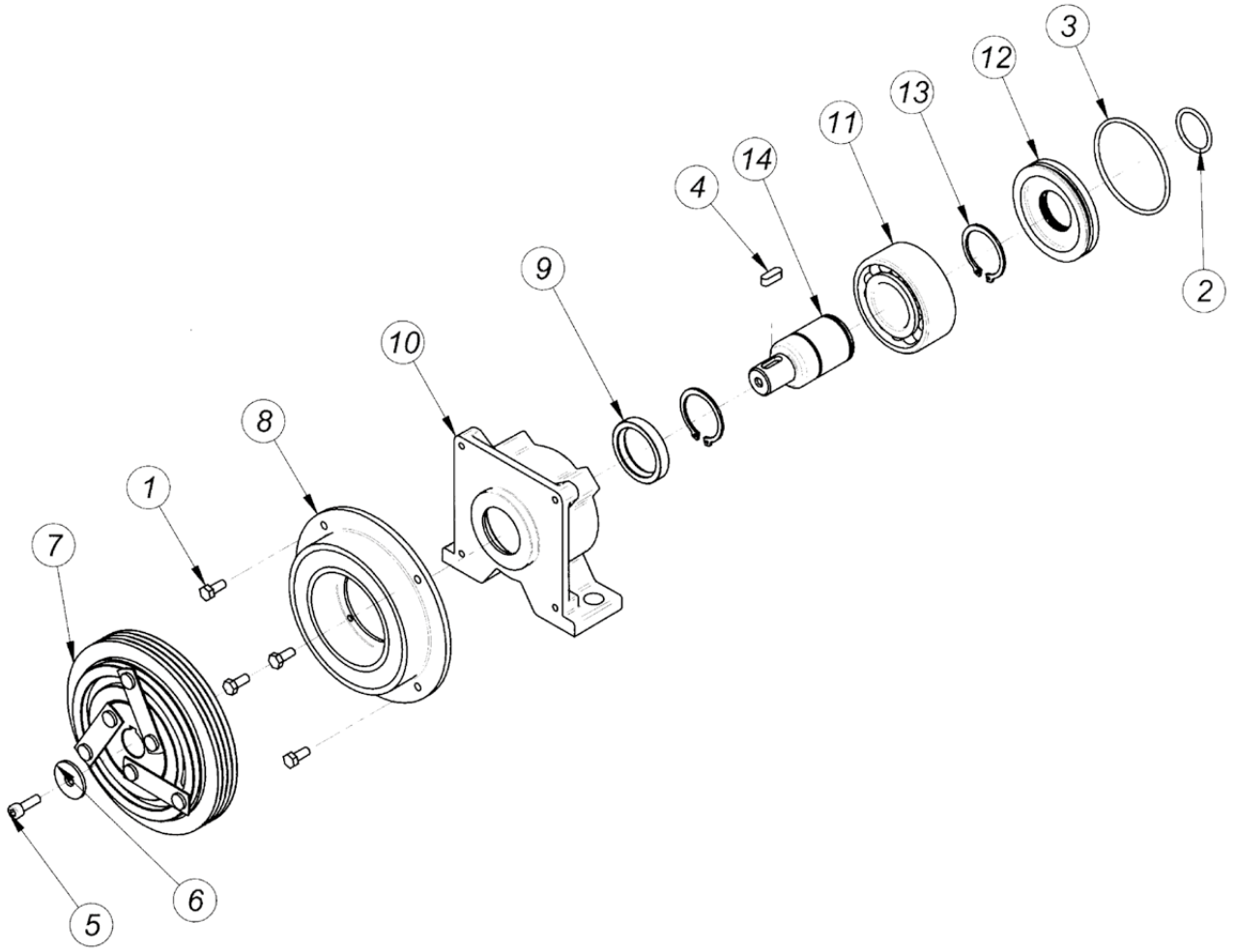

Pos.	CODICE	DENOMINAZIONE	DENOMINATION	DESCRIPTION	BEZEICHNUNG	Q.TA'
1	620512	Vite EN 24017 M5x12	Vis EN 24017 M5x12	Socket EN 24017 M5x12	Befestigungsschraube EN 24017 M5x12	4
2	402100	Anello OR	Bague torique	O-Ring	O-Ring	1
3	403225	Anello OR D.60	Bague torique d.60	O-Ring d.60	O-Ring d.60	1
4	435515	Linguetta UNI 6604 A 5x5x20	Languette UNI 6604 5x5x20	Woudruff key UNI 6604 5x5x20	Halbrundkeil UNI 6604 5x5x20	1
5	610620	VTCEI UNI 5931 M6x12	Vis TCHC UNI 5931 M6x12	Socket capscrew UNI 5931 M6x12	Befestigungsschraube UNI 5931 M6x12	1
6	RSP246	Rosetta UNI 6593 - 6x24x2	Rondelle UNI 6593 - 6x24x2	Washer UNI 6593 - 6x24x2	Rosette UNI 6593 - 6x24x2	1
7	4003/125PLVP	PULEGGIA CINGHIE POLI "V" ELETTROFRIZIONE	POULIE "V" Electro-embrayage	PULLEY "V" Electric clutch	RIEMENSCHEIBE "V" Elektroschaltkpplung	1
8	401203/125B 402403/125B	Bobina	Bobine	Coil	Zundspüle	1
9	303040	Anello di tenuta 30x40x7	Bague d'etancheite 30x40x7	Sealing ring 30x40x7	Dichtring 30x40x7	1
10	30009/3	Scatola	Carcasse	Housing	Gehause	1
11	503206	Cuscinetto SKF 3206	Palier SKF 3206	Bearing SKF 3206	Kugellager SKF 3206	1
12	COP-062	Anello	Bague	Ring	Ring	1
13	903000	Anello elastico UNI 7436 - 25	Circlip UNI 7436 - 25	Snap ring UNI 7436 - 25	Seegerring UNI 7436 - 25	2
14	AC30900	Albero	Arbre	Shaft	Welle	1

• INNESTO ELETTROMAGNETICO 3 daNm
• EMBRAYAGE ELECTROMAGNETIQUE 3 daNm
• ELECTROMAGNETIC COUPLING 3 daNm
• ELEKTROMAGNETISCHE SCHALTKUPPLUNGEN 3 daNm

SERIE: 30900-1/N1 12 Volt
SERIE: 30900-2/N1 24 Volt

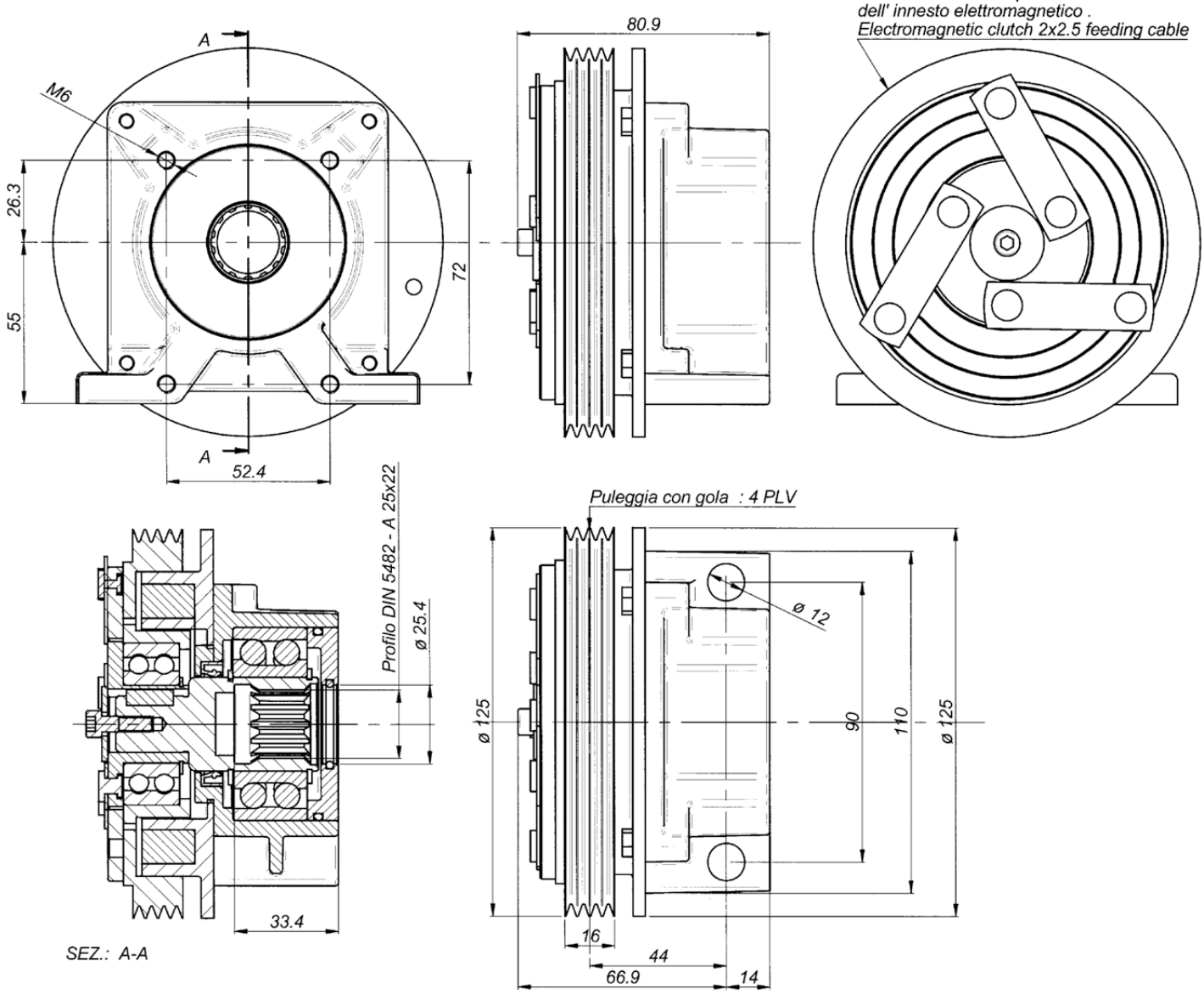

Nominal torque	3,0 daNm		Connection time	25 m/sec
Static torque	4,5 daNm		Disconnection time	40 m/sec
Dynamic torque	3,2 daNm	at 500 rpm	Minimun time between two connection	20 sec
	2,8 daNm	at 1000 rpm		
	1,7 daNm	at 1500 rpm		
	1,4 daNm	at 2000 rpm		
	1,2 daNm	at 2500 rpm	Max speed	5000 rpm
	0,9 daNm	at 3000 rpm	Weight	3 Kg

Electric absorption	Resistance (W)		Current (A)		Power (W)	
	20° C	120° C	20° C	120° C	20° C	120° C
12 V DC	5,7	7,9	2,1	1,6	25,2	18
24 V DC	21,7	30,7	1,1	0,8	26,5	19

All technical data are at 20°C / at 120° C the performance are less 20%
All electromagneteic clutches are reversible.

• TAVOLA RICAMBI INNESTO ELETTROMAGNETICO TIPO FRONTALE 10daNm

• TABLEAU DES PIECES DETACHEES POUR EMBRAYAGE ELECTROMAGNETIQUE FRONTAL TYPE 10 daNm

• SPARE PARTS TABLE FOR ELECTROMAGNETIC COUPLING FRONTAL 10 daNm

• ERSATZTEILLISTE FUR ELEKTROMAGNETISCHE SCHALTKUPPLUNGEN 3daNm

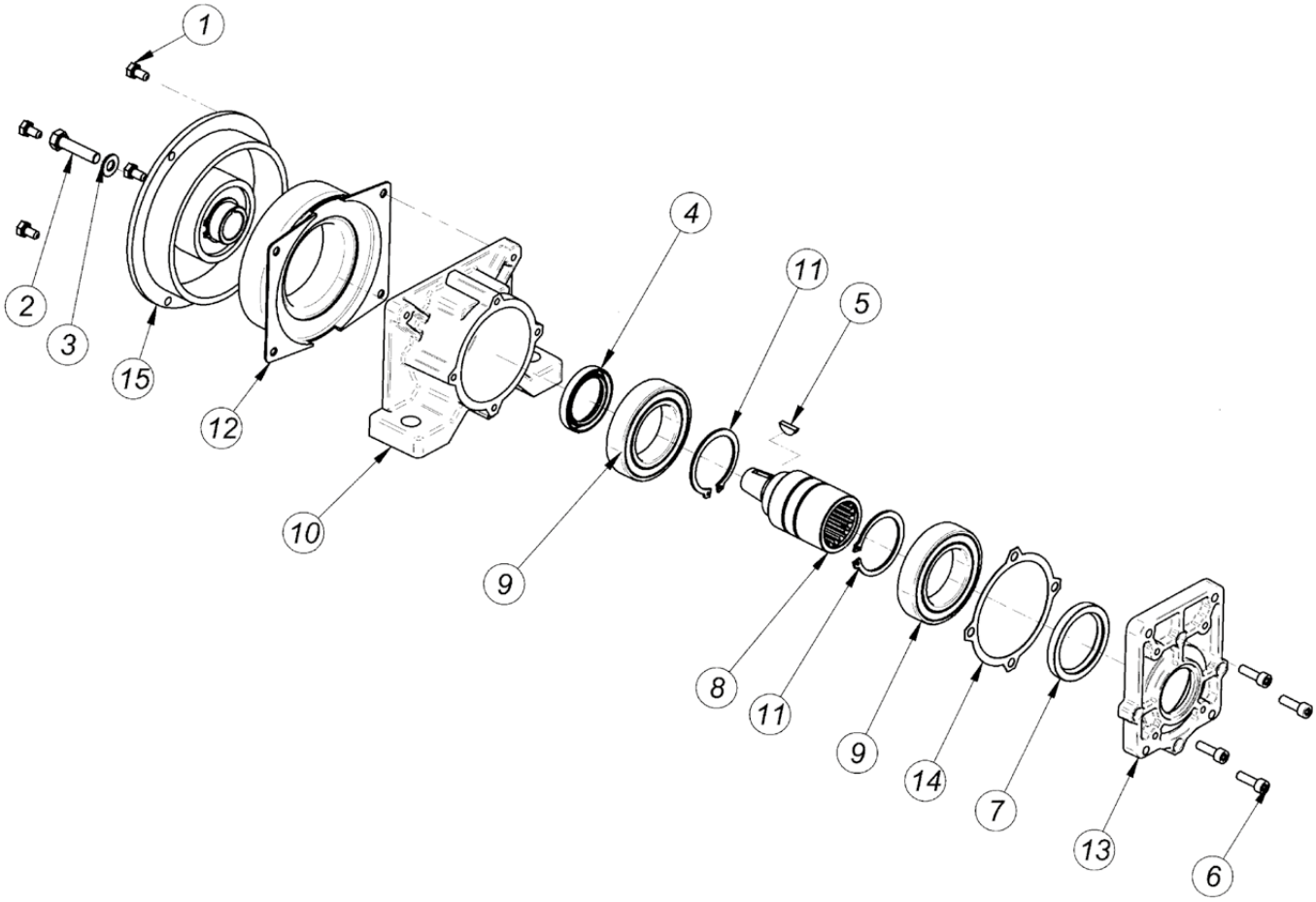

Pos.	CODICE	DENOMINAZIONE	DENOMINATION	DESCRIPTION	BEZEICHNUNG	Q.TA'
1	611428	Vite EN 24017 M6x12	Vis EN24017 M6x12	Soket EN 24017 M6x12	Befestigungsschraube EN 24017 M6x12	4
2	610516	Vite EN 24017 M8x35	Vis EN 24017 M8x35	Socket EN 24017 M8x35	Befestigungsschraube EN 24017 M8x35	1
3	RSPAL8	Rosetta per M8	Rondelle D.8	Washer d.8	Rosette durchm 8	1
4	303550	Anello di tenuta 35x50x7	Bague d'etancheite 35x50x7	Sealing ring 35x50x7	Dichtring 35x50x7	1
5	700465	Linguetta UNI 6606 4x6.5	Languette UNI 6606 4x6.5	Woodruff key UNI 6606 4x6.5	Halbrundkeil UNI 6606 4x6.5	1
6	610620	Vite T.C.E.I M6x20	Vis T.C.H.C. M6x20	Socket capscrew M6x20	Befestigungsschraube UNI 5931 M6x20	4
7	304560	Anello di tenuta 45x60x7	Bague d'etancheite 45x60x7	Sealing ring 45x60x7	Dichtring 45x60x7	1
8	A30901	Albero	Arbre	Shaft	Welle	1
9	506009/2Z	Cuscinetto 6009 2rs	Palier SKF 6009 2RS	Bearing SKF 6009 2RS	Kugellager SKF 6009-2RS	2
10	30009.1	Scatola	Carcasse	Housing	Gehause	1
11	904500	Anello elastico d.45	Circlip d.45	Snap ring d.45	Seegerring d.45	2
12	401210/FRB 402410/FRB	Bobina	Bobine	Coil	Zundspüle	1
13	30900.1	Flangia per pompe Gr 1 - 2	Flasque puor pompes Gr 1 - 2	Flange for pumps Gr 1 - 2	Flansch fur pumpe Gr 1- 2	1
14	30009.1.1	Guarnizione	Joint	Gasket	Dichtung	1
15	4010/FRBP	Elettrofrizione frontale	Electro-embrayage frontal	Electric clutch	Elektroschaltkpplung strirnbauweise	1

• INNESTO ELETTROMAGNETICO TIPO FRONTALE 10 daNm

• EMBRAYAGE ELECTROMAGNETIQUE FRONTAL TYPE 10 daNm

• ELECTROMAGNETIC COUPLING FRONTAL TYPE 10 daNm

• ELEKTROMAGNETISCHE SCHALTKUPPLUNGEN 10 daNm

SERIE: 30933 12 Volt
SERIE: 30934 24 Volt

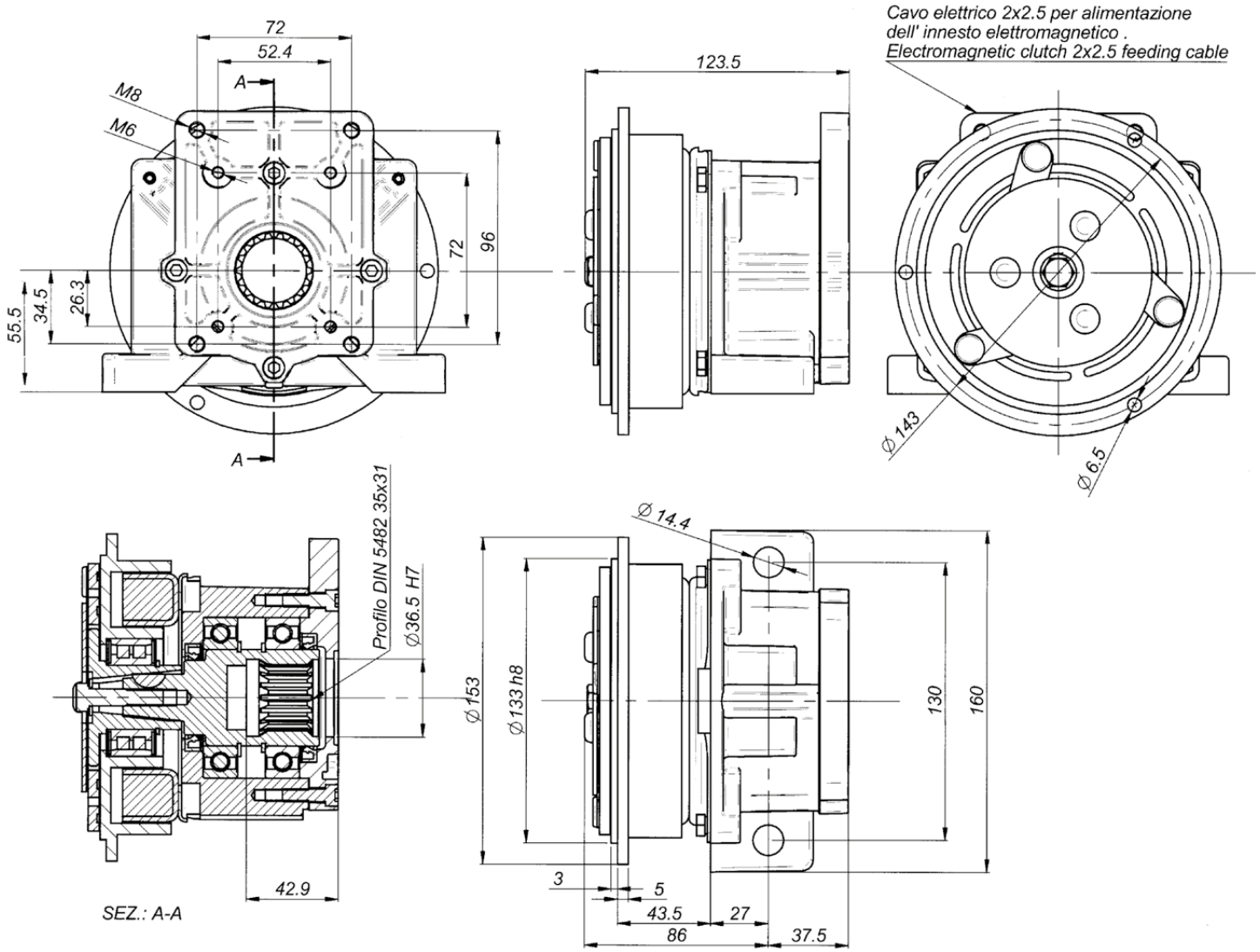

Nominal torque	7,8 daNm		Connection time	25 m/sec
Static torque	12,5 daNm		Disconnection time	40 m/sec
Dynamic torque	8,5 daNm	at 500 rpm	Minimun time between two connection	20 sec
	7,0 daNm	at 1000 rpm		
	4,2 daNm	at 1500 rpm		
	3,5 daNm	at 2000 rpm		
	2,7 daNm	at 2500 rpm	Max speed	5000 rpm
	2,5 daNm	at 3000 rpm	Weight	5 Kg

Electric absorption	Resistance (Ω)		Current (A)		Power (W)	
	20° C	120° C	20° C	120° C	20° C	120° C
12 V DC	4,00	5,60	3,33	2,00	40,00	24,00
24 V DC	20,00	28,00	1,26	0,77	30,30	18,18

All technical data are at 20°C / at 120 °C the performance are less 20%
All electromagneteic clutches are reversible.

• FLANGE PER INNESTI ELETTROMAGNETICI 10 daNm

• BRIDE POUR EMBRAYAGES ELECTROMAGNETIQUE 10 daNm

• FLANGES FOR ELECTROMAGNETIC COUPLING 10 daNm

• FLANSCHE FUR ELEKTROMAGNETISCHE SCHALTKUPPLUNGEN 10 daNm

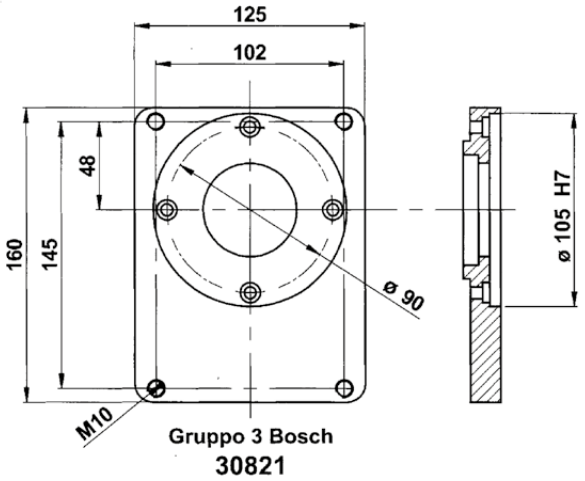

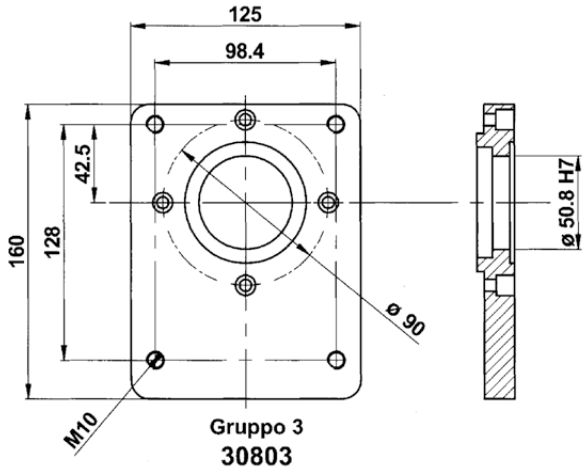

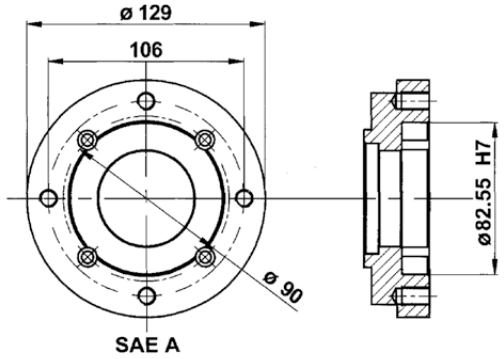

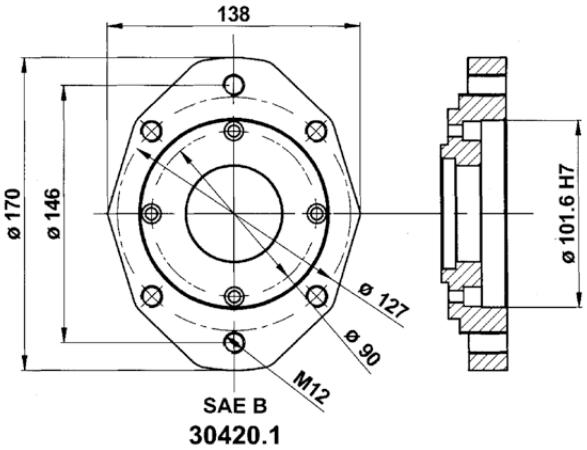

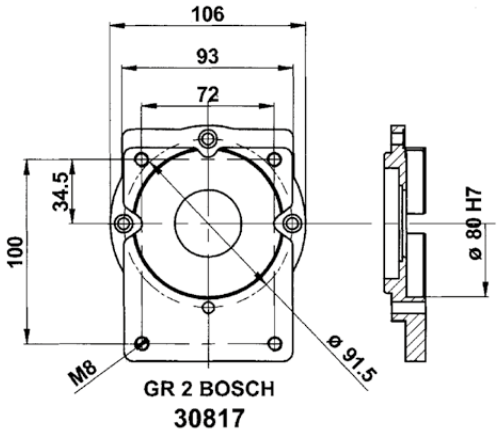

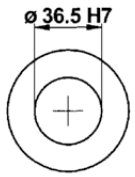

CODICE, CODE, CODE No., CODENUMMER					
Electric absorption	FLANGIA: TIPO, BRIDE: TYPE, FLANGE: TYPE, FLANSCHTYPE				
	Gr.2 BOSCH	Gr.3	Gr. 3 BOSCH	SAE A	SAE B
12 Volt	30933/2B	30935	30933/3B	30933/SA	30933/SB
24 Volt	30934/2B	30936	30934/3B	30934/SA	30934/SB

• TAVOLA RICAMBI INNESTO ELETTROMAGNETICO 10daNm

• TABLEAU DES PIECES DETACHEES POUR EMBRAYAGE ELECTROMAGNETIQUE 10daNm

• SPARE PARTS TABLE FOR ELECTROMAGNETIC COUPLING 10daNm

• ERSAZTEILLISTE FUR ELEKTROMAGNETISCHE SCHALTKUPPLUNGEN 10daNm

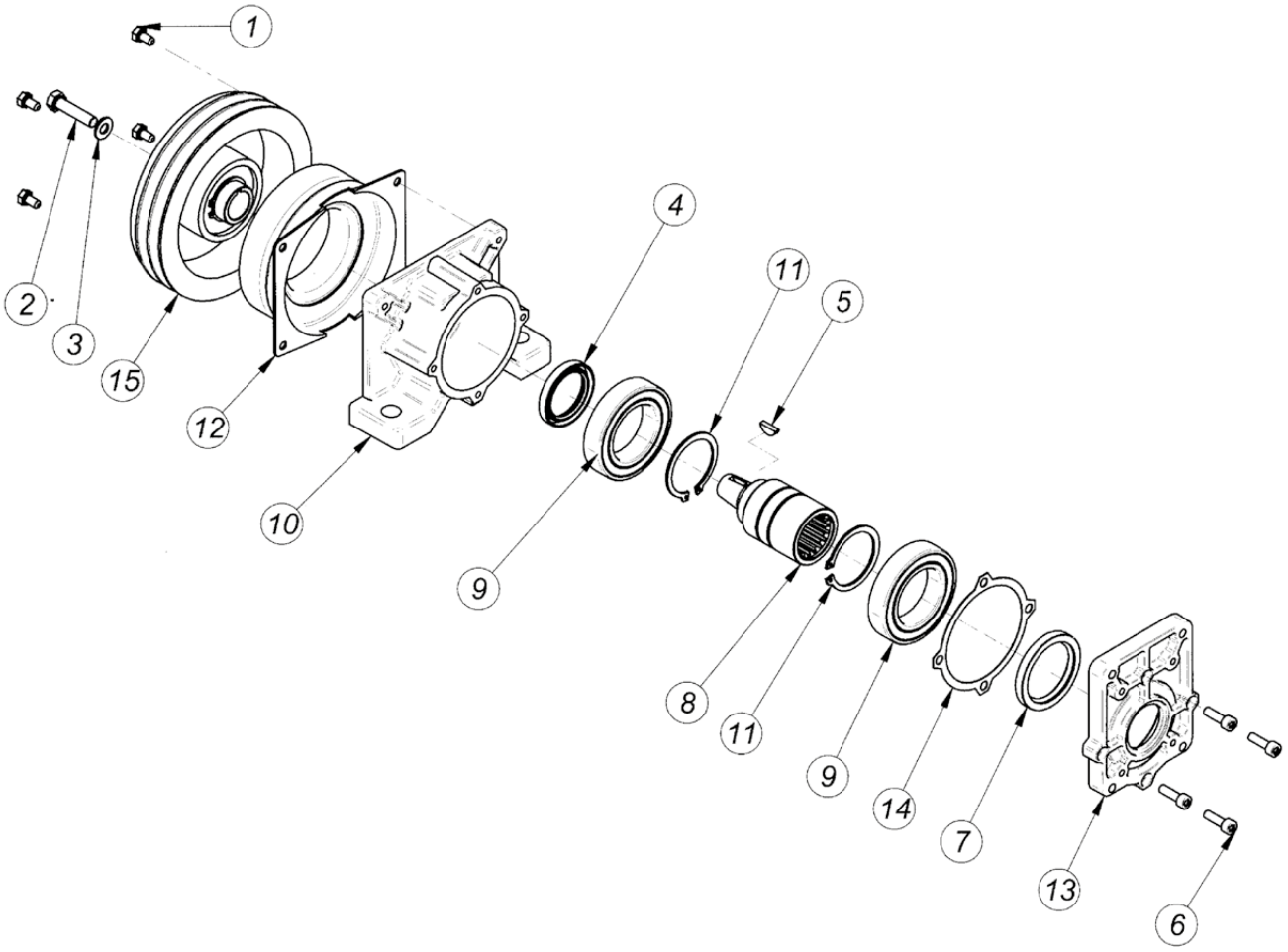

Pos.	CODICE	DENOMINAZIONE	DENOMINATION	DESCRIPTION	BEZEICHNUNG	Q.TA'
1	611428	Vite EN 24017 M6x12	Vis EN24017 M6x12	Soket EN 24017 M6x12	Befestigungsschraube EN 24017 M6x12	4
2	610516	Vite EN 24017 M8x35	Vis EN 24017 M8x35	Socket EN 24017 M8x35	Befestigungsschraube EN 24017 M8x35	1
3	RSPAL8	Rosetta per M8	Rondelle D.8	Washer d.8	Rosette durchm 8	1
4	303550	Anello di tenuta 35x50x7	Bague d'etancheite 35x50x7	Sealing ring 35x50x7	Dichtring 35x50x7	1
5	700465	Linguetta UNI 6606 4x6.5	Languette UNI 6606 4x6.5	Woodruff key UNI 6606 4x6.5	Halbrundkeil UNI 6606 4x6.5	1
6	610620	Vite T.C.E.I M6x20	Vis T.C.H.C. M6x20	Socket capscrew M6x20	Befestigungsschraube UNI 5931 M6x20	4
7	304560	Anello di tenuta 45x60x7	Bague d'etancheite 45x60x7	Sealing ring 45x60x7	Dichtring 45x60x7	1
8	A30901	Albero	Arbre	Shaft	Welle	1
9	506009/2Z	Cuscinetto 6009 2rs	Palier SKF 6009 2RS	Bearing SKF 6009 2RS	Kugellager SKF 6009-2RS	2
10	30009.1	Scatola	Carcasse	Housing	Gehause	1
11	904500	Anello elastico d.45	Circlip d.45	Snap ring d.45	Seegerring d.45	2
12	401210/153 402410/153	Bobina	Bobine	Coil	Zundspüle	1
13	30900.1	Flangia per pompe Gr 1 - 2	Flasque puor pompes Gr 1 - 2	Flange for pumps Gr 1 - 2	Flansch fur pumpe Gr 1- 2	1
14	30009.1.1	Guarnizione	Joint	Gasket	Dichtung	1
15	4010/153P	Elettrofrizione	Electro-embrayage	Electric clutch	Elektroschaltkpplung	1

• INNESTO ELETTROMAGNETICO 10daNm
• EMBRAYAGE ELECTROMAGNETIQUE 10daNm
• ELECTROMAGNETIC COUPLING 10daNm
• ELEKTROMAGNETISCHE SCHALTKUPPLUNGEN 10daNm

SERIE: 30901 12 Volt
SERIE: 30903 24 Volt

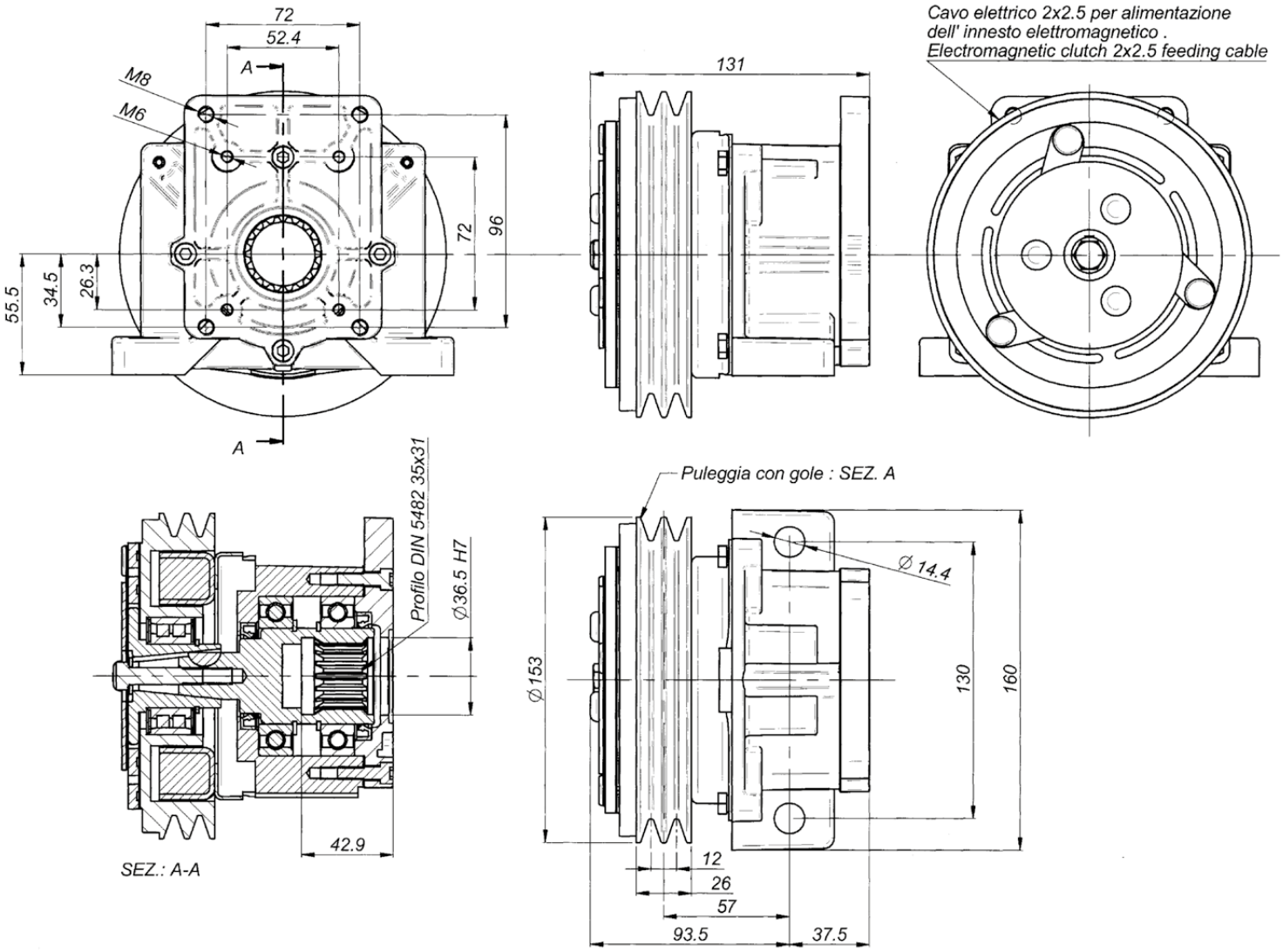

Nominal torque	7,8 daNm		Connection time	25 m/sec
Static torque	12,5 daNm		Disconnection time	40 m/sec
Dynamic torque	8,5 daNm	at 500 rpm	Minimun time between two connection	20 sec
	7,0 daNm	at 1000 rpm		
	4,2 daNm	at 1500 rpm		
	3,5 daNm	at 2000 rpm		
	2,7 daNm	at 2500 rpm	Max speed	5000 rpm
	2,5 daNm	at 3000 rpm	Weight	5,5 Kg

Electric absorption	Resistance (Ω)		Current (A)		Power (W)	
	20° C	120° C	20° C	120° C	20° C	120° C
12 V DC	4,00	5,60	3,33	2,00	40,00	24,00
24 V DC	20,00	28,00	1,26	0,77	30,30	18,18

All technical data are at 20°C / at 120 °C the performance are less 20%
All electromagneteic clutches are reversible.

• FLANGE PER INNESTI ELETTROMAGNETICI 10 daNm
• BRIDE POUR EMBRAYAGES ELECTROMAGNETIQUE 10 daNm
• FLANGES FOR ELECTROMAGNETIC COUPLING 10 daNm
• FLANSCHE FUR ELEKTROMAGNETISCHE SCHALTKUPPLUNGEN 10 daNm

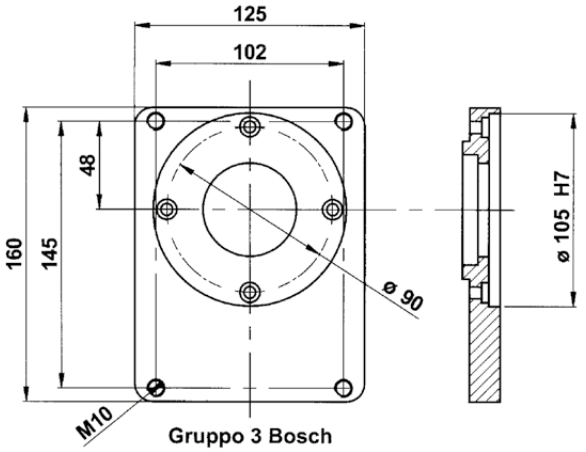

Gruppo 3 Bosch
30821

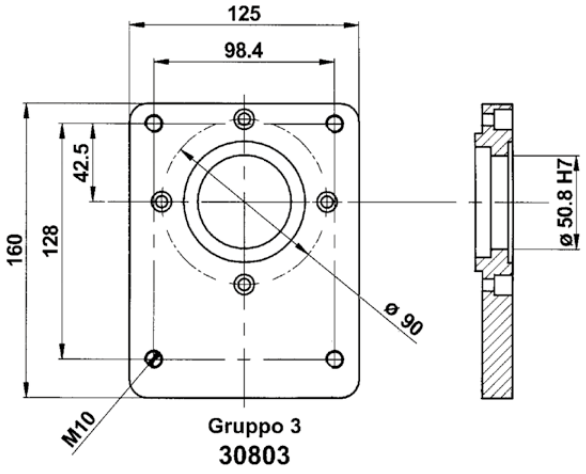

Gruppo 3
30803

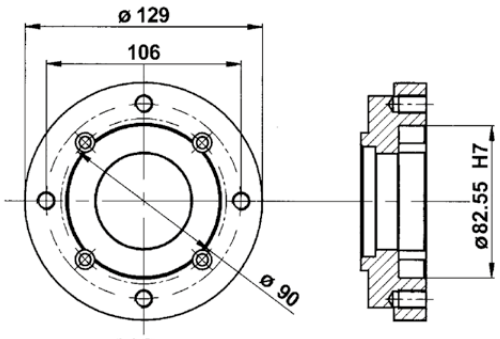

SAE A
30420.3

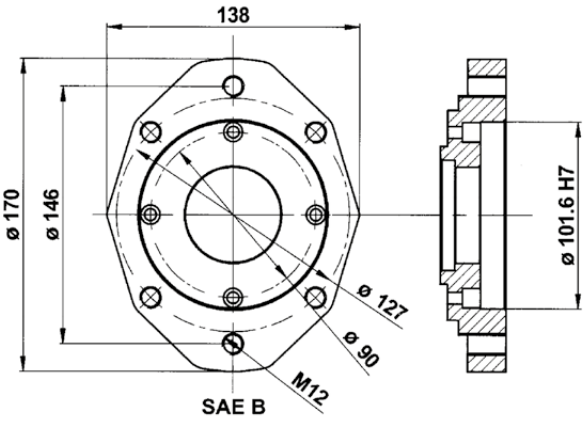

SAE B
30420.1

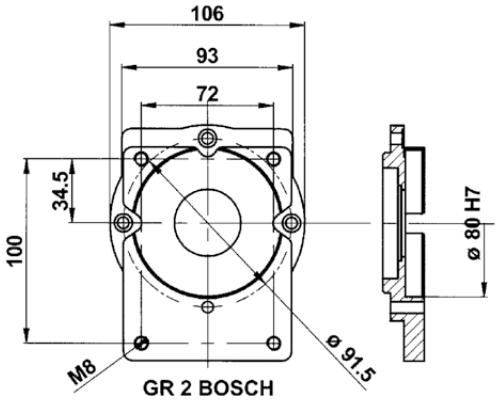

GR 2 BOSCH
30817

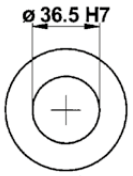

920266

CODICE, CODE, CODE No., CODENUMMER					
Electric absorption	FLANGIA: TIPO, BRIDE: TYPE, FLANGE: TYPE, FLANSCHTYPE				
	Gr.2 BOSCH	Gr.3	Gr. 3 BOSCH	SAE A	SAE B
12 Volt	30917	30909	30925	30901/SA	30901/SB
24 Volt	30919	30911	30927	30903/SA	30903/SB

• TAVOLA RICAMBI INNESTO ELETTROMAGNETICO 10daNm PULEGGIA PLV

• TABLEAU DES PIECES DETACHEES POUR EMBRAYAGE ELECTROMAGNETIQUE 10daNm POULIE PLV

• SPARE PARTS TABLE FOR ELECTROMAGNETIC COUPLING 10daNm PLV PULLEY

• ERSAZTEILLISTE FUR ELEKTROMAGNETISCHE SCHALTKUPPLUNGEN 10daNm PLV

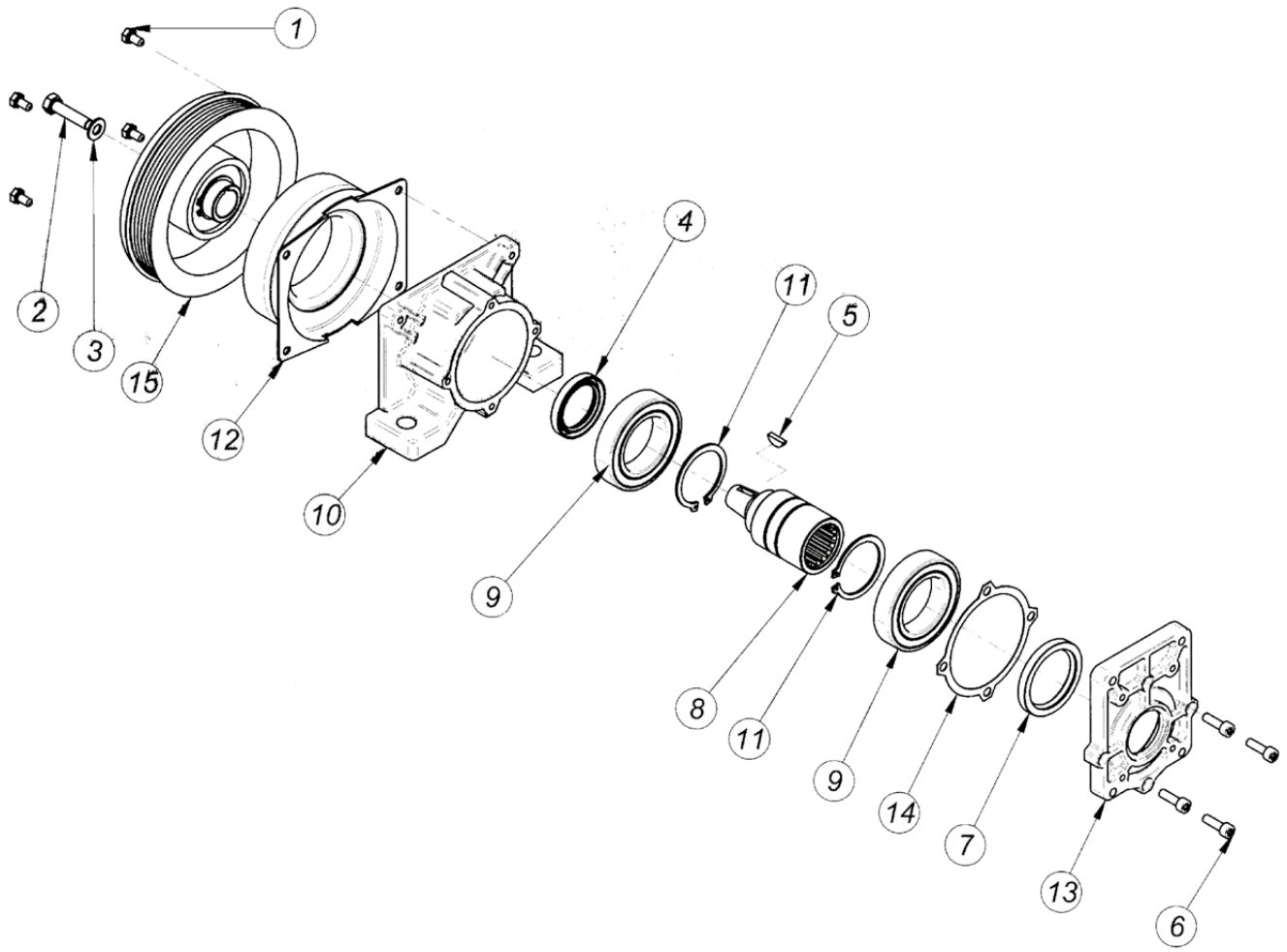

Pos.	CODICE	DENOMINAZIONE	DENOMINATION	DESCRIPTION	BEZEICHNUNG	Q.TA'
1	611428	Vite EN 24017 M6x12	Vis EN24017 M6x12	Soket EN 24017 M6x12	Befestigungsschraube EN 24017 M6x12	4
2	610516	Vite EN 24017 M8x35	Vis EN 24017 M8x35	Socket EN 24017 M8x35	Befestigungsschraube EN 24017 M8x35	1
3	RSPAL8	Rosetta per M8	Rondelle D.8	Washer d.8	Rosette durchm 8	1
4	303550	Anello di tenuta 35x50x7	Bague d'etancheite 35x50x7	Sealing ring 35x50x7	Dichtring 35x50x7	1
5	700465	Linguetta UNI 6606 4x6.5	Languette UNI 6606 4x6.5	Woodruff key UNI 6606 4x6.5	Halbrundkeil UNI 6606 4x6.5	1
6	610620	Vite T.C.E.I M6x20	Vis T.C.H.C. M6x20	Socket capscrew M6x20	Befestigungsschraube UNI 5931 M6x20	4
7	304560	Anello di tenuta 45x60x7	Bague d'etancheite 45x60x7	Sealing ring 45x60x7	Dichtring 45x60x7	1
8	A30901	Albero	Arbre	Shaft	Welle	1
9	506009/2Z	Cuscinetto 6009 2rs	Palier SKF 6009 2RS	Bearing SKF 6009 2RS	Kugellager SKF 6009-2RS	2
10	30009.1	Scatola	Carcasse	Housing	Gehause	1
11	904500	Anello elastico d.45	Circlip d.45	Snap ring d.45	Seegerring d.45	2
12	401210/PLV 402410/PLV	Bobina	Bobine	Coil	Zundspüle	1
13	30900.1	Flangia per pompe Gr 1 - 2	Flasque puor pompes Gr 1 - 2	Flange for pumps Gr 1 - 2	Flansch fur pumpe Gr 1- 2	1
14	30009.1.1	Guarnizione	Joint	Gasket	Dichtung	1
15	4010/PLV	Elettrofrizione PLV	Electro-embrayage PLV	Electric clutch PLV	Elektroschaltkpplung PLV	1

• INNESTO ELETTROMAGNETICO 10daNm PULEGGIA PLV

• EMBRAYAGE ELECTROMAGNETIQUE 10daNm POULIE PLV

• ELECTROMAGNETIC COUPLING 10daNm PLV PULLEY

• ELEKTROMAGNETISCHE SCHALTKUPPLUNGEN 10daNm PLV

SERIE: 30901-1/7 12 Volt
SERIE: 30903-1/7 24 Volt

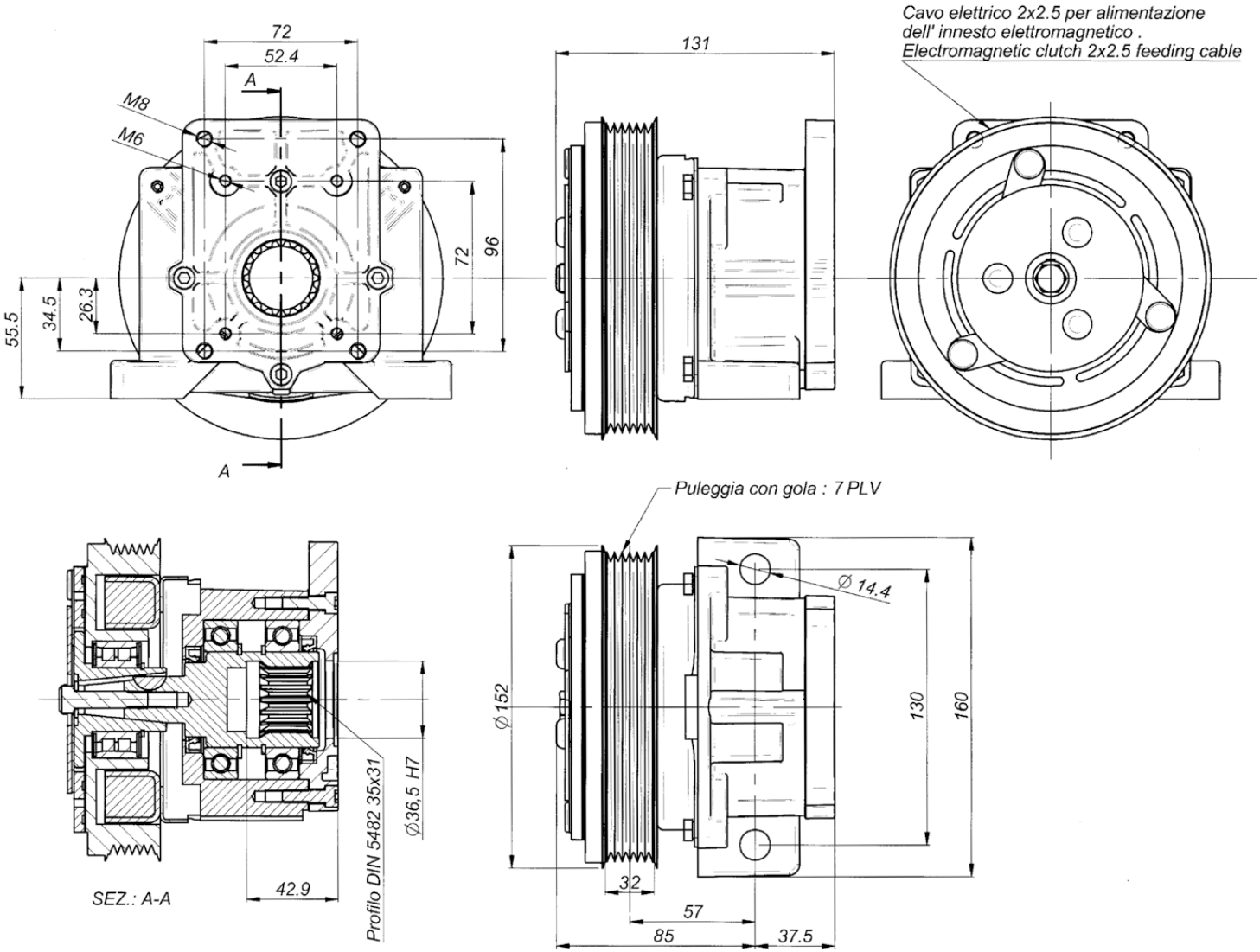

Nominal torque	7,8 daNm		Connection time	25 m/sec
Static torque	12,5 daNm		Disconnection time	40 m/sec
Dynamic torque	8,5 daNm	at 500 rpm	Minimun time between two connection	20 sec
	7,0 daNm	at 1000 rpm		
	4,2 daNm	at 1500 rpm		
	3,5 daNm	at 2000 rpm		
	2,7 daNm	at 2500 rpm	Max speed	5000 rpm
	2,5 daNm	at 3000 rpm	Weight	5,5 Kg

Electric absorption	Resistance (Ω)		Current (A)		Power (W)	
	20° C	120° C	20° C	120° C	20° C	120° C
12 V DC	4,00	5,60	3,33	2,00	40,00	24,00
24 V DC	20,00	28,00	1,26	0,77	30,30	18,18

All technical data are at 20°C / at 120 °C the performance are less 20%
All electromagneteic clutches are reversible.

• FLANGE PER INNESTI ELETTROMAGNETICI 10 daNm
• BRIDE POUR EMBRAYAGES ELECTROMAGNETIQUE 10 daNm
• FLANGES FOR ELECTROMAGNETIC COUPLING 10 daNm
• FLANSCHE FUR ELEKTROMAGNETISCHE SCHALTKUPPLUNGEN 10 daNm

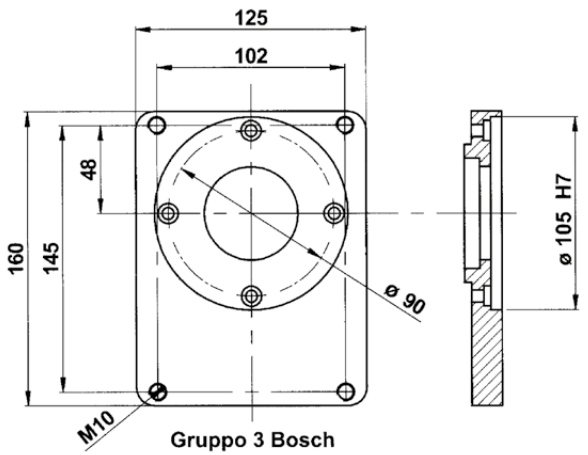

Gruppo 3 Bosch
30821

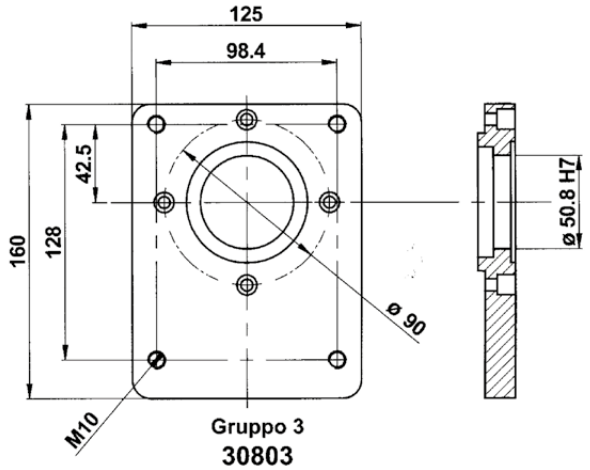

Gruppo 3
30803

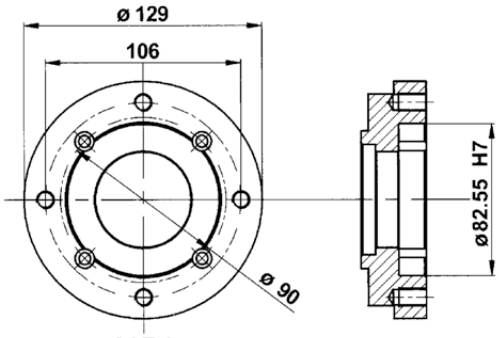

SAE A
30420.3

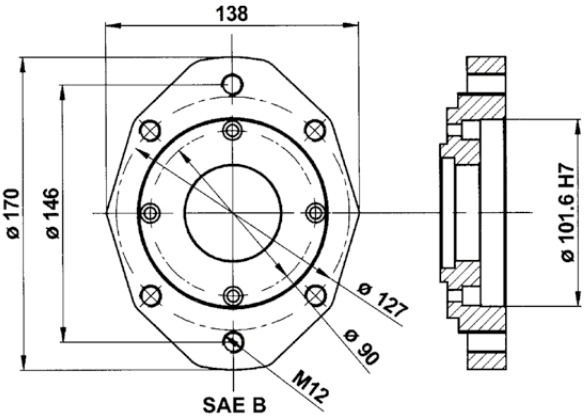

SAE B
30420.1

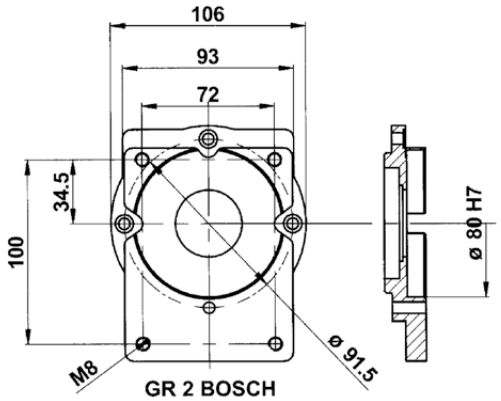

GR 2 BOSCH
30817

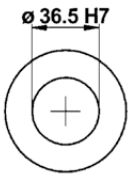

920266

CODICE, CODE, CODE No., CODENUMMER					
Electric absorption	FLANGIA: TIPO, BRIDE: TYPE, FLANGE: TYPE, FLANSCHTYPE				
	Gr.2 BOSCH	Gr.3	Gr. 3 BOSCH	SAE A	SAE B
12 Volt	30917-1	30909-1	30925-1	30901-1/SA	30901-1/SB
24 Volt	30919-1	30911-1	30927-1	30903-1/SA	30903-1/SB

• TAVOLA RICAMBI INNESTO ELETTROMAGNETICO 14daNm
• TABLEAU DES PIECES DETACHEES POUR EMBRAYAGE ELECTROMAGNETIQUE 14daNm
• SPARE PARTS TABLE FOR ELECTROMAGNETIC COUPLING 14daNm
• ERSAZTEILLISTE FUR ELEKTROMAGNETISCHE SCHALTKUPPLUNGEN 14daNm

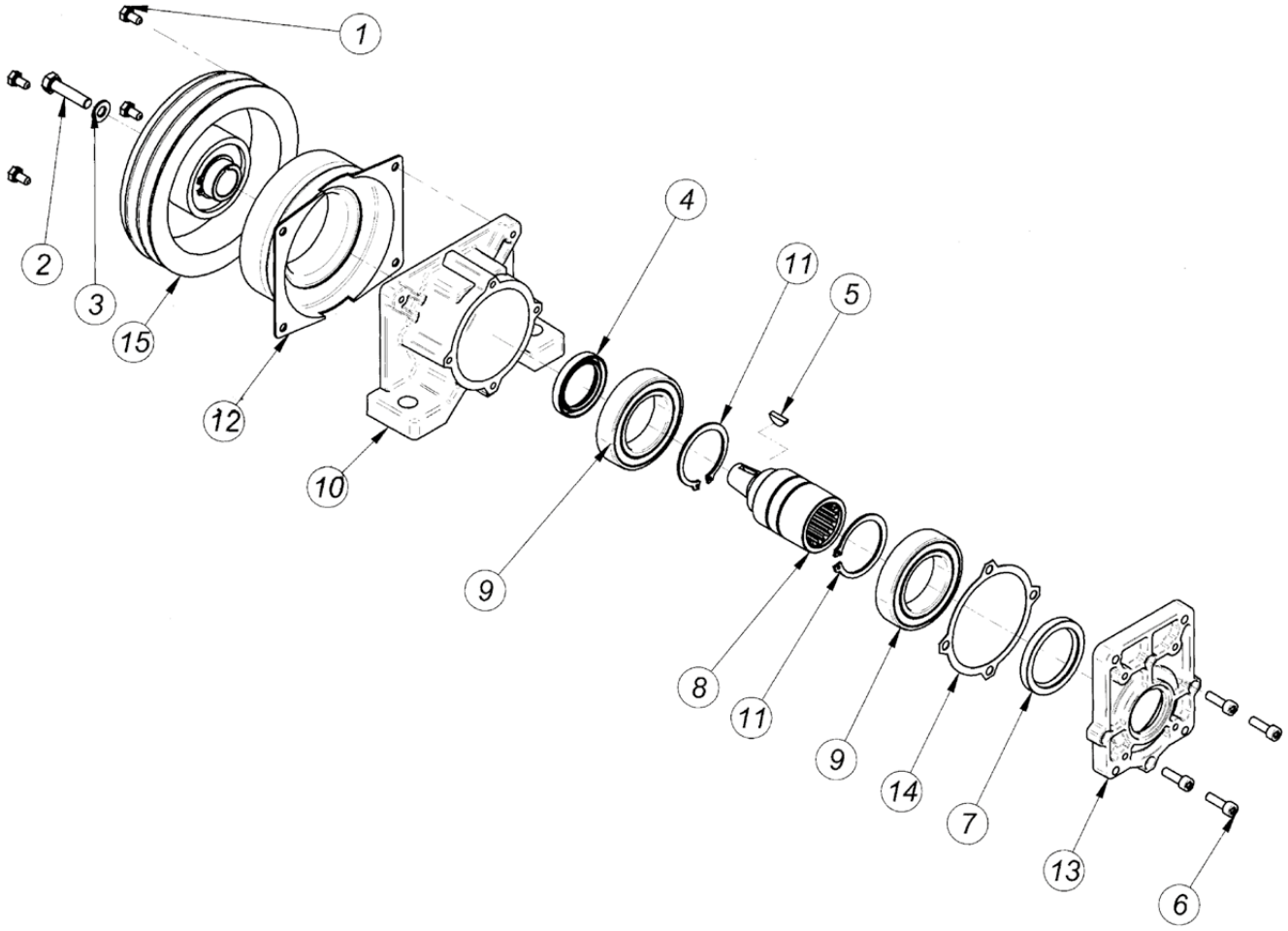

Pos.	CODICE	DENOMINAZIONE	DENOMINATION	DESCRIPTION	BEZEICHNUNG	Q.TA'
1	611428	Vite EN 24017 M6x12	Vis EN24017 M6x12	Soket EN 24017 M6x12	Befestigungsschraube EN 24017 M6x12	4
2	610516	Vite EN 24017 M8x35	Vis EN 24017 M8x35	Socket EN 24017 M8x35	Befestigungsschraube EN 24017 M8x35	1
3	RSPAL8	Rosetta per M8	Rondelle D.8	Washer d.8	Rosette durchm 8	1
4	303550	Anello di tenuta 35x50x7	Bague d'etancheite 35x50x7	Sealing ring 35x50x7	Dichtring 35x50x7	1
5	700465	Linguetta UNI 6606 4x6.5	Languette UNI 6606 4x6.5	Woodruff key UNI 6606 4x6.5	Halbrundkeil UNI 6606 4x6.5	1
6	610620	Vite T.C.E.I M6x20	Vis T.C.H.C. M6x20	Socket capscrew M6x20	Befestigungsschraube UNI 5931 M6x20	4
7	304560	Anello di tenuta 45x60x7	Bague d'etancheite 45x60x7	Sealing ring 45x60x7	Dichtring 45x60x7	1
8	A30901	Albero	Arbre	Shaft	Welle	1
9	506009/2Z	Cuscinetto 6009 2rs	Palier SKF 6009 2RS	Bearing SKF 6009 2RS	Kugellager SKF 6009-2RS	2
10	30009.1	Scatola	Carcasse	Housing	Gehause	1
11	904500	Anello elastico d.45	Circlip d.45	Snap ring d.45	Seegerring d.45	2
12	401214/153 402414/153	Bobina	Bobine	Coil	Zundspüle	1
13	30900.1	Flangia per pompe Gr 1 - 2	Flasque puor pompes Gr 1 - 2	Flange for pumps Gr 1 - 2	Flansch fur pumpe Gr 1- 2	1
14	30009.1.1	Guarnizione	Joint	Gasket	Dichtung	1
15	4014/153P	Elettrofrizione	Electro-embrayage	Electric clutch	Elektroschaltkpplung	1

• INNESTO ELETTROMAGNETICO 14daNm
• EMBRAYAGE ELECTROMAGNETIQUE 14daNm
• ELECTROMAGNETIC COUPLING 14daNm
• ELEKTROMAGNETISCHE SCHALTKUPPLUNGEN 14daNm

SERIE: 30929 12 Volt
SERIE: 30930 24 Volt

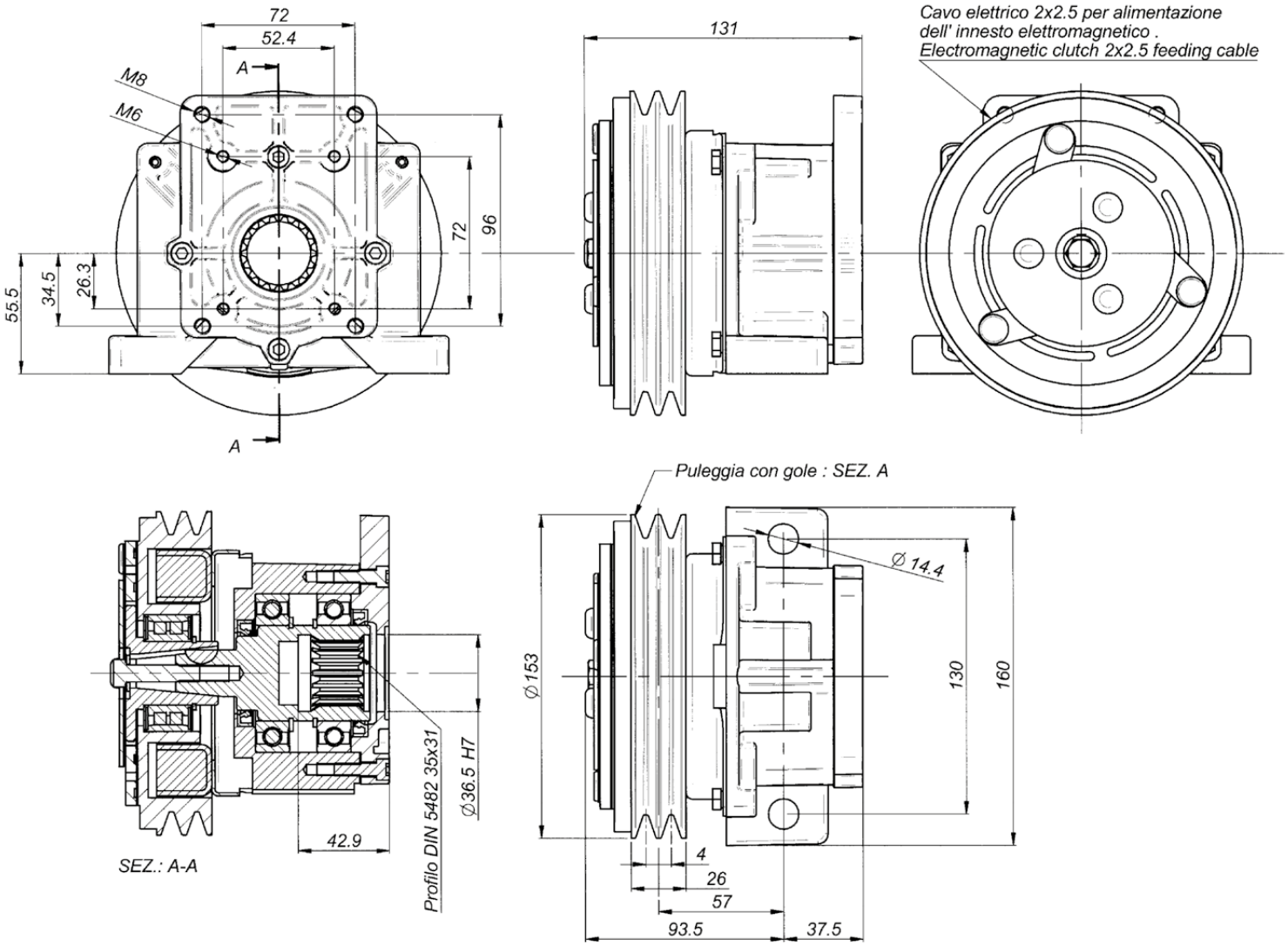

Nominal torque	11,8 daNm		Connection time	25 m/sec
Static torque	14,0 daNm		Disconnection time	40 m/sec
Dynamic torque	12,5 daNm	at 500 rpm	Minimun time between two connection	20 sec
	11,0 daNm	at 1000 rpm		
	8,2 daNm	at 1500 rpm		
	7,5 daNm	at 2000 rpm		
	6,7 daNm	at 2500 rpm	Max speed	5000 rpm
	6,5 daNm	at 3000 rpm	Weight	5,5 Kg

Electric absorption	Resistance (Ω)		Current (A)		Power (W)	
	20° C	120° C	20° C	120° C	20° C	120° C
12 V DC	4,00	5,60	3,33	2,00	40,00	24,00
24 V DC	20,00	28,00	1,26	0,77	30,30	18,18

All technical data are at 20°C / at 120 °C the performance are less 20%
All electromagneteic clutches are reversible.

• FLANGE PER INNESTI ELETTROMAGNETICI 14 daNm
• BRIDE POUR EMBRAYAGES ELECTROMAGNETIQUE 14 daNm
• FLANGES FOR ELECTROMAGNETIC COUPLING 14 daNm
• FLANSCHE FUR ELEKTROMAGNETISCHE SCHALTKUPPLUNGEN 14 daNm

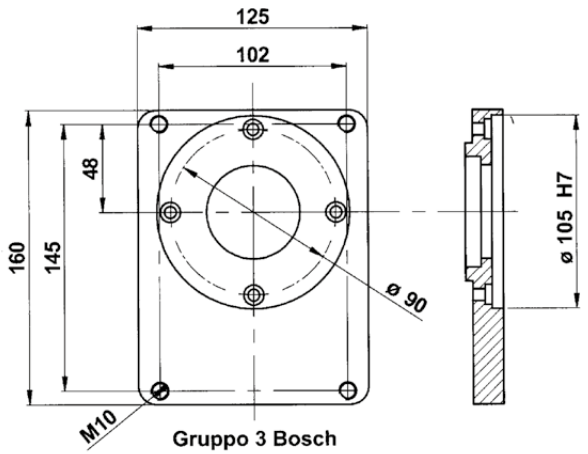

Gruppo 3 Bosch
30821

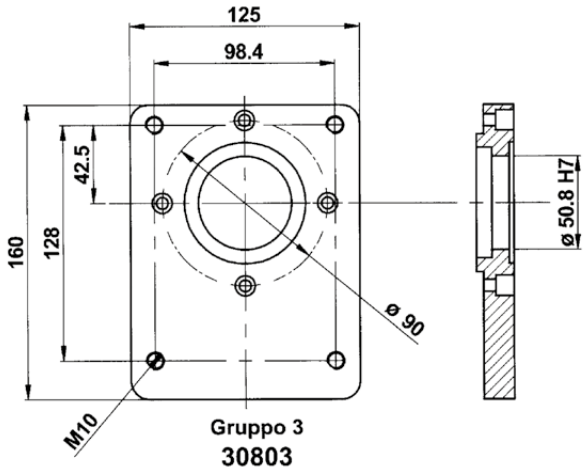

Gruppo 3
30803

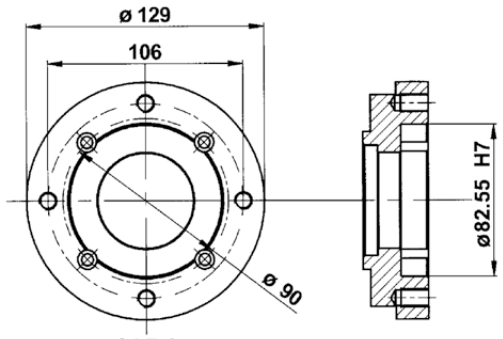

SAE A
30420.3

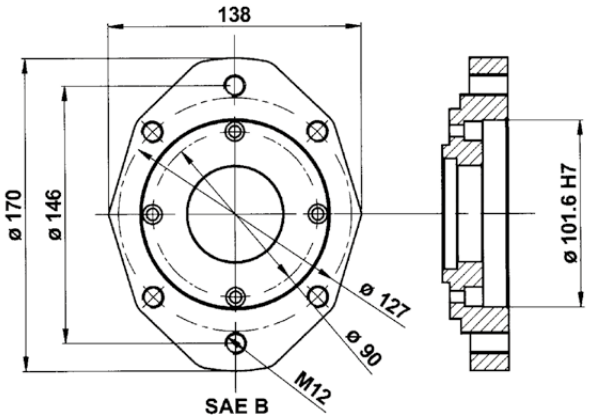

SAE B
30420.1

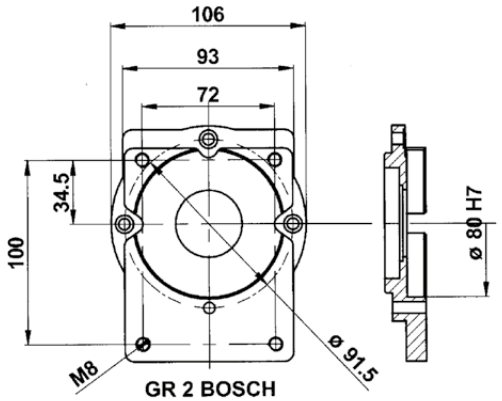

GR 2 BOSCH
30817

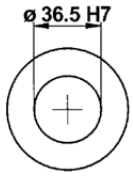

920266

CODICE, CODE, CODE No., CODENUMMER					
Electric absorption	FLANGIA: TIPO, BRIDE: TYPE, FLANGE: TYPE, FLANSCHTYPE				
	Gr.2 BOSCH	Gr.3	Gr. 3 BOSCH	SAE A	SAE B
12 Volt	30929/2B	30931	30931/3B	30929/SA	30929/SB
24 Volt	30930/2B	30932	30932/3B	30930/SA	30930/SB

• TAVOLA RICAMBI INNESTO ELETTROMAGNETICO 14daNm
• TABLEAU DES PIECES DETACHEES POUR EMBRAYAGE ELECTROMAGNETIQUE 14daNm
• SPARE PARTS TABLE FOR ELECTROMAGNETIC COUPLING 14daNm
• ERSAZTEILLISTE FUR ELEKTROMAGNETISCHE SCHALTKUPPLUNGEN 14daNm

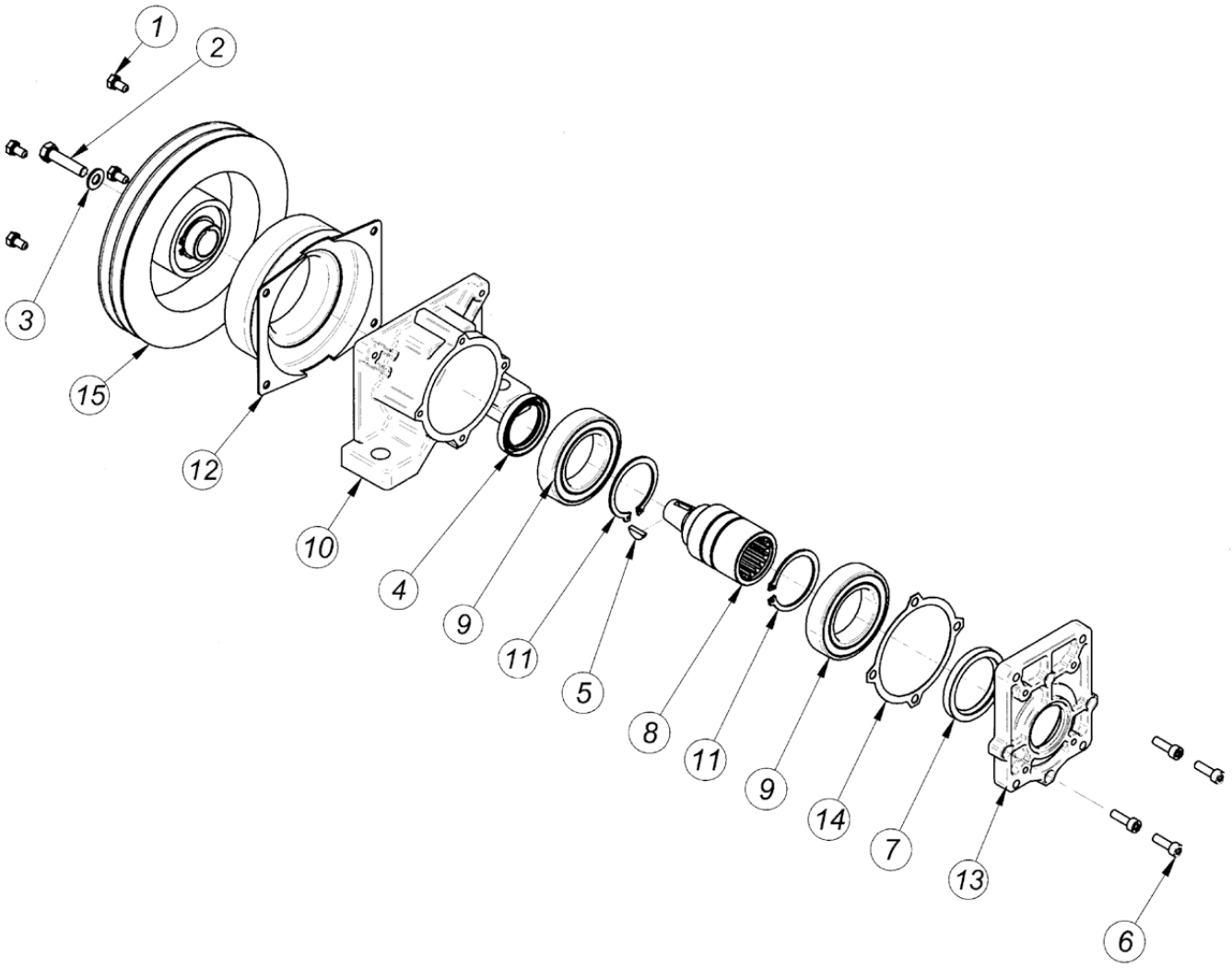

Pos.	CODICE	DENOMINAZIONE	DENOMINATION	DESCRIPTION	BEZEICHNUNG	Q.TA'
1	611428	Vite EN 24017 M6x12	Vis EN24017 M6x12	Soket EN 24017 M6x12	Befestigungsschraube EN 24017 M6x12	4
2	610516	Vite EN 24017 M8x35	Vis EN 24017 M8x35	Socket EN 24017 M8x35	Befestigungsschraube EN 24017 M8x35	1
3	RSPAL8	Rosetta per M8	Rondelle D.8	Washer d.8	Rosette durchm 8	1
4	303550	Anello di tenuta 35x50x7	Bague d'etancheite 35x50x7	Sealing ring 35x50x7	Dichtring 35x50x7	1
5	700465	Linguetta UNI 6606 4x6.5	Languette UNI 6606 4x6.5	Woodruff key UNI 6606 4x6.5	Halbrundkeil UNI 6606 4x6.5	1
6	610620	Vite T.C.E.I M6x20	Vis T.C.H.C. M6x20	Socket capscrew M6x20	Befestigungsschraube UNI 5931 M6x20	4
7	304560	Anello di tenuta 45x60x7	Bague d'etancheite 45x60x7	Sealing ring 45x60x7	Dichtring 45x60x7	1
8	A30901	Albero	Arbre	Shaft	Welle	1
9	506009/2Z	Cuscinetto 6009 2rs	Palier SKF 6009 2RS	Bearing SKF 6009 2RS	Kugellager SKF 6009-2RS	2
10	30009.1	Scatola	Carcasse	Housing	Gehause	1
11	904500	Anello elastico d.45	Circlip d.45	Snap ring d.45	Seegerring d.45	2
12	401214/175 402414/175	Bobina	Bobine	Coil	Zundspüle	1
13	30900.1	Flangia per pompe Gr 1 - 2	Flasque puor pompes Gr 1 - 2	Flange for pumps Gr 1 - 2	Flansch fur pumpe Gr 1- 2	1
14	30009.1.1	Guarnizione	Joint	Gasket	Dichtung	1
15	4014/175P	Elettrofrizione	Electro-embrayage	Electric clutch	Elektroschaltkpplung	1

• INNESTO ELETTROMAGNETICO 14daNm
• EMBRAYAGE ELECTROMAGNETIQUE 14daNm
• ELECTROMAGNETIC COUPLING 14daNm
• ELEKTROMAGNETISCHE SCHALTKUPPLUNGEN 14daNm

SERIE: 30980 12 Volt
SERIE: 30981 24 Volt

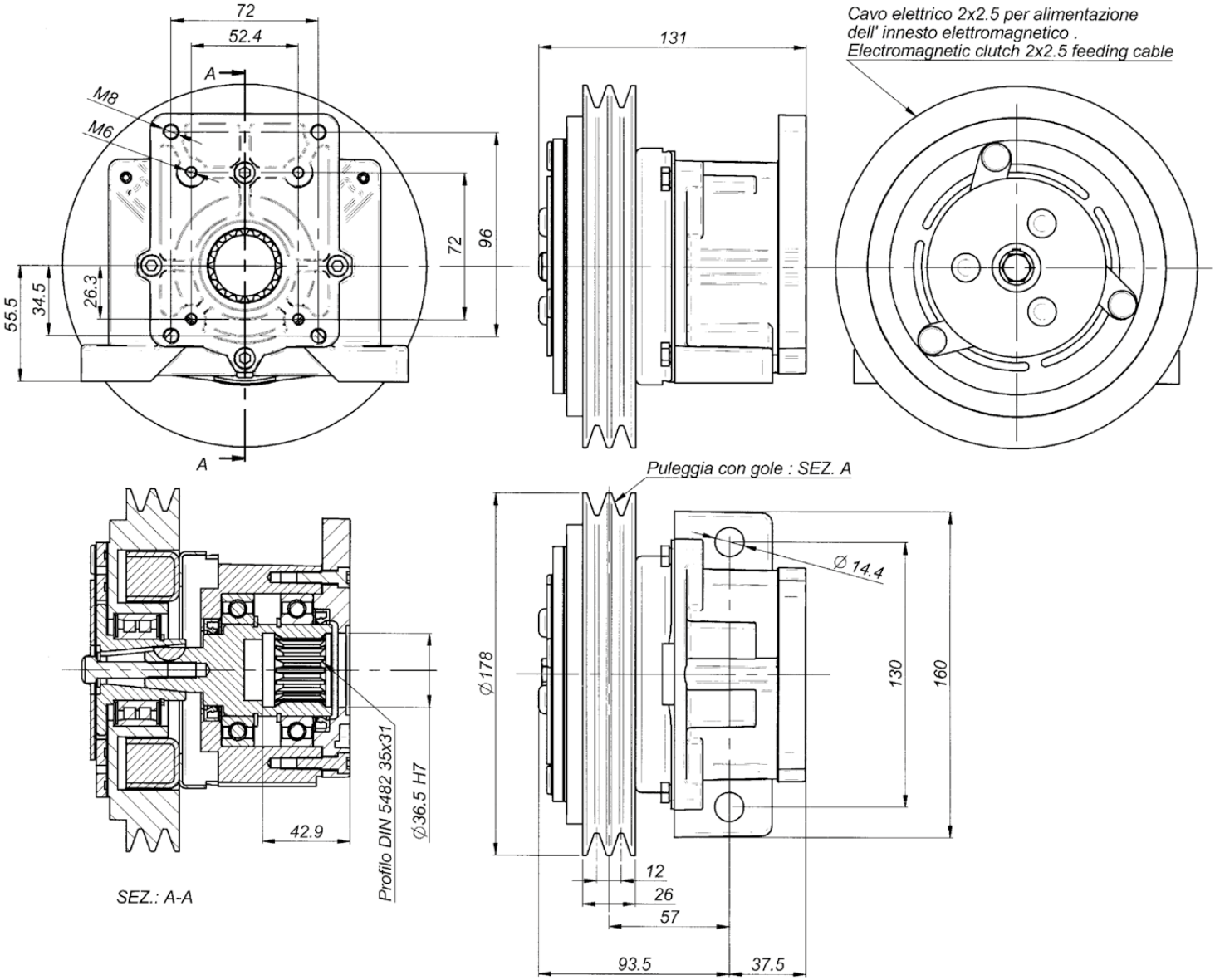

Nominal torque	11,8 daNm		Connection time	25 m/sec
Static torque	14,0 daNm		Disconnection time	40 m/sec
Dynamic torque	12,5 daNm	at 500 rpm	Minimun time between two connection	20 sec
	11,0 daNm	at 1000 rpm		
	8,2 daNm	at 1500 rpm		
	7,5 daNm	at 2000 rpm		
	6,7 daNm	at 2500 rpm	Max speed	5000 rpm
	6,5 daNm	at 3000 rpm	Weight	5,8 Kg

Electric absorption	Resistance (Ω)		Current (A)		Power (W)	
	20° C	120° C	20° C	120° C	20° C	120° C
12 V DC	4,00	5,60	3,33	2,00	40,00	24,00
24 V DC	20,00	28,00	1,26	0,77	30,30	18,18

All technical data are at 20°C / at 120 °C the performance are less 20%
All electromagneteic clutches are reversible.

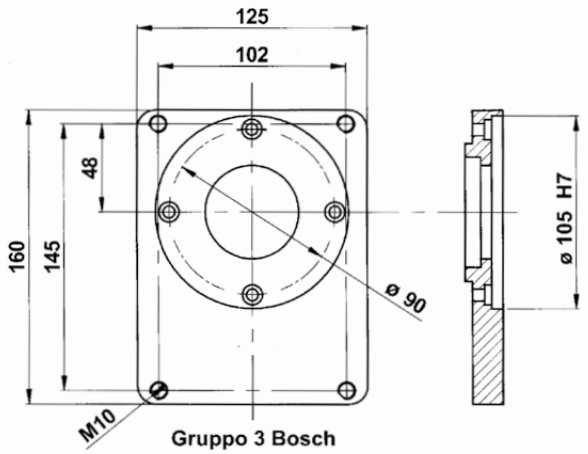

Gruppo 3 Bosch
30821

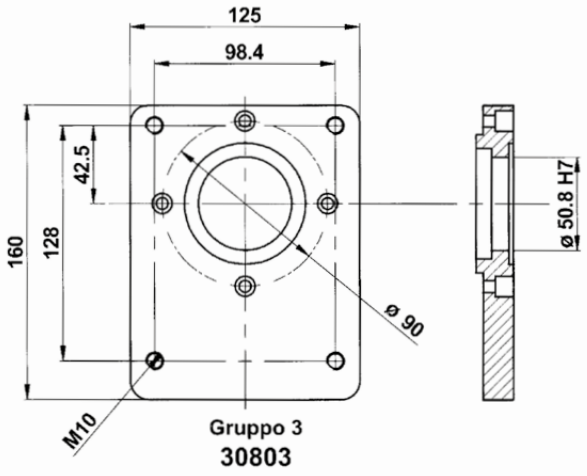

Gruppo 3
30803

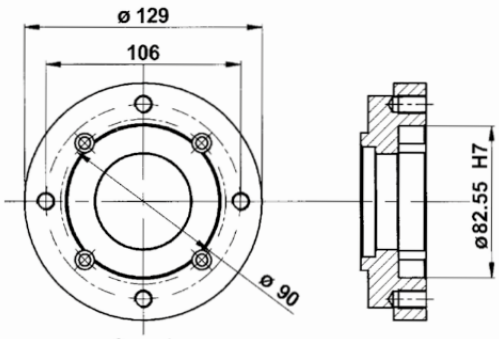

SAE A
30420.3

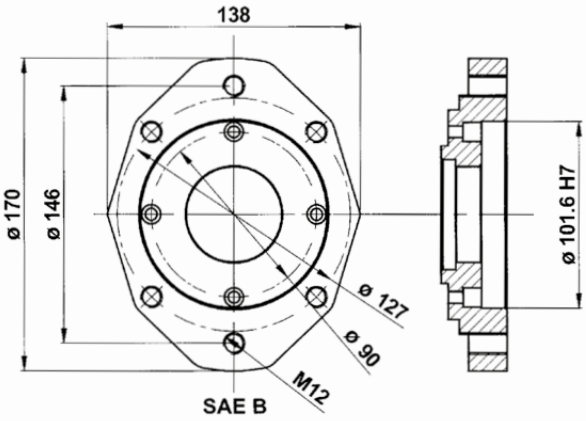

SAE B
30420.1

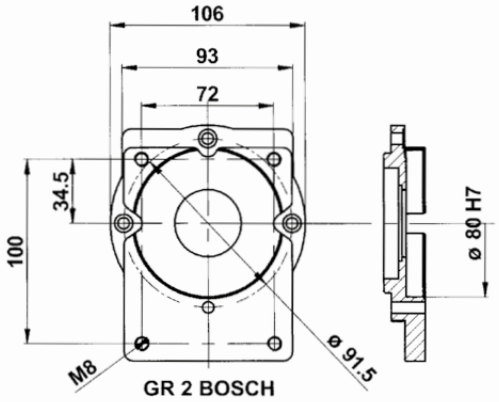

GR 2 BOSCH
30817

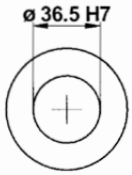

920266

CODICE, CODE, CODE No., CODENUMMER					
Electric absorption	FLANGIA: TIPO, BRIDE: TYPE, FLANGE: TYPE, FLANSCHTYPE				
	Gr.2 BOSCH	Gr.3	Gr. 3 BOSCH	SAE A	SAE B
12 Volt	30980/2B	30982	30982/3B	30980/SA	30980/SB
24 Volt	30981/2B	30983	30982/3B	30981/SA	30981/SB

• TAVOLA RICAMBI INNESTO ELETTROMAGNETICO 14daNm PULEGGIA PLV

• TABLEAU DES PIECES DETACHEES POUR EMBRAYAGE ELECTROMAGNETIQUE 14daNm POULIE PLV

• SPARE PARTS TABLE FOR ELECTROMAGNETIC COUPLING 14daNm PLV PULLEY

• ERSAZTEILLISTE FUR ELEKTROMAGNETISCHE SCHALTKUPPLUNGEN 14daNm PLV

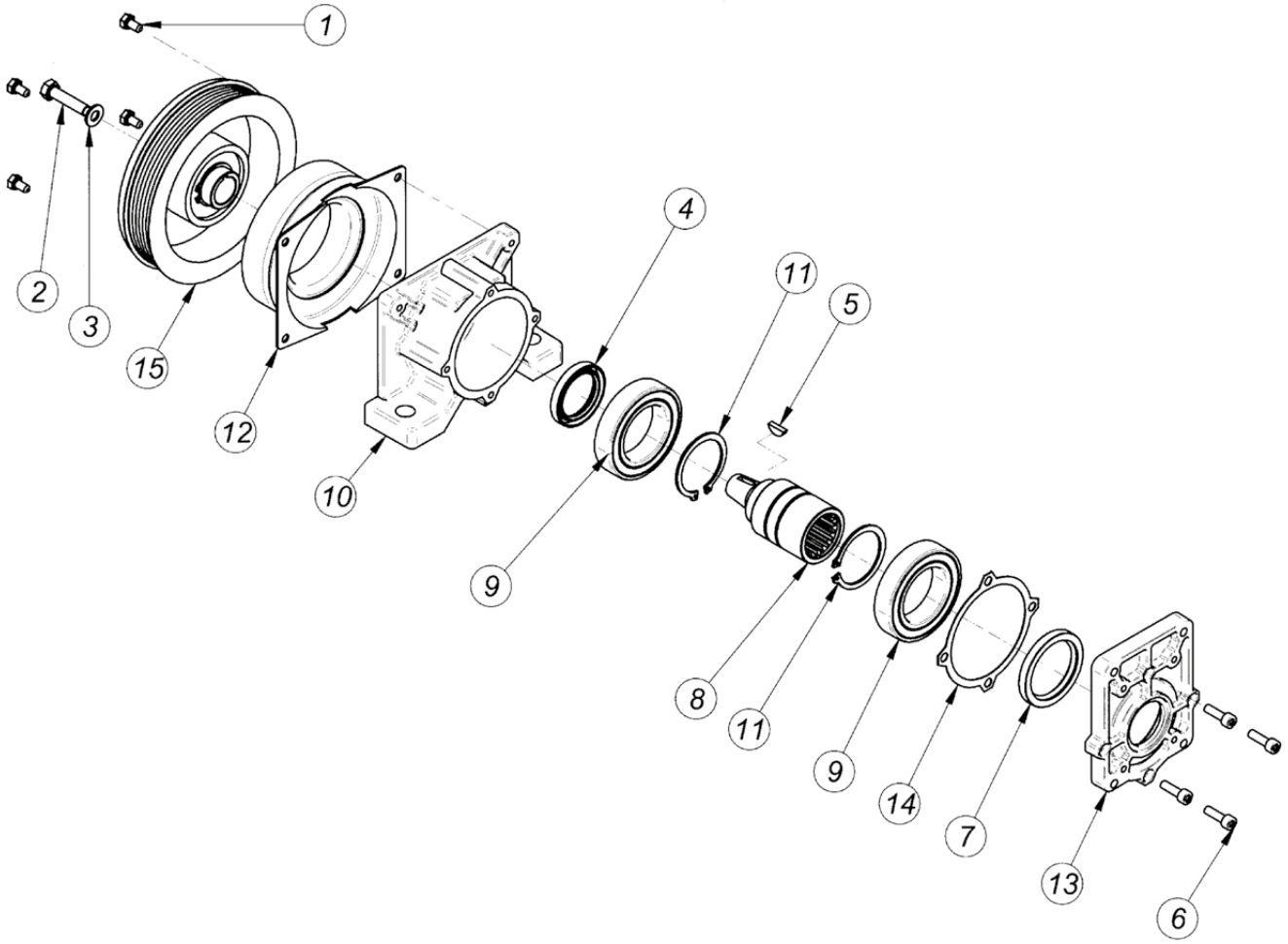

Pos.	CODICE	DENOMINAZIONE	DENOMINATION	DESCRIPTION	BEZEICHNUNG	Q.TA'
1	611428	Vite EN 24017 M6x12	Vis EN24017 M6x12	Soket EN 24017 M6x12	Befestigungsschraube EN 24017 M6x12	4
2	610516	Vite EN 24017 M8x35	Vis EN 24017 M8x35	Socket EN 24017 M8x35	Befestigungsschraube EN 24017 M8x35	1
3	RSPAL8	Rosetta per M8	Rondelle D.8	Washer d.8	Rosette durchm 8	1
4	303550	Anello di tenuta 35x50x7	Bague d'etancheite 35x50x7	Sealing ring 35x50x7	Dichtring 35x50x7	1
5	700465	Linguetta UNI 6606 4x6.5	Languette UNI 6606 4x6.5	Woodruff key UNI 6606 4x6.5	Halbrundkeil UNI 6606 4x6.5	1
6	610620	Vite T.C.E.I M6x20	Vis T.C.H.C. M6x20	Socket capscrew M6x20	Befestigungsschraube UNI 5931 M6x20	4
7	304560	Anello di tenuta 45x60x7	Bague d'etancheite 45x60x7	Sealing ring 45x60x7	Dichtring 45x60x7	1
8	A30901	Albero	Arbre	Shaft	Welle	1
9	506009/2Z	Cuscinetto 6009 2rs	Palier SKF 6009 2RS	Bearing SKF 6009 2RS	Kugellager SKF 6009-2RS	2
10	30009.1	Scatola	Carcasse	Housing	Gehause	1
11	904500	Anello elastico d.45	Circlip d.45	Snap ring d.45	Seegerring d.45	2
12	401214/PLV 402414/PLV	Bobina	Bobine	Coil	Zundspüle	1
13	30900.1	Flangia per pompe Gr 1 - 2	Flasque puor pompes Gr 1 - 2	Flange for pumps Gr 1 - 2	Flansch fur pumpe Gr 1- 2	1
14	30009.1.1	Guarnizione	Joint	Gasket	Dichtung	1
15	4014/PLVP	Elettrofrizione PLV	Electro-embrayage PLV	Electric clutch PLV	Elektroschaltkpplung PLV	1

• INNESTO ELETTROMAGNETICO 14daNm PULEGGIA PLV

• EMBRAYAGE ELECTROMAGNETIQUE 14daNm POULIE PLV

• ELECTROMAGNETIC COUPLING 14daNm PLV PULLEY

• ELEKTROMAGNETISCHE SCHALTKUPPLUNGEN 14daNm PLV

SERIE: 30929-1/7 12 Volt
SERIE: 30930-1/7 24 Volt

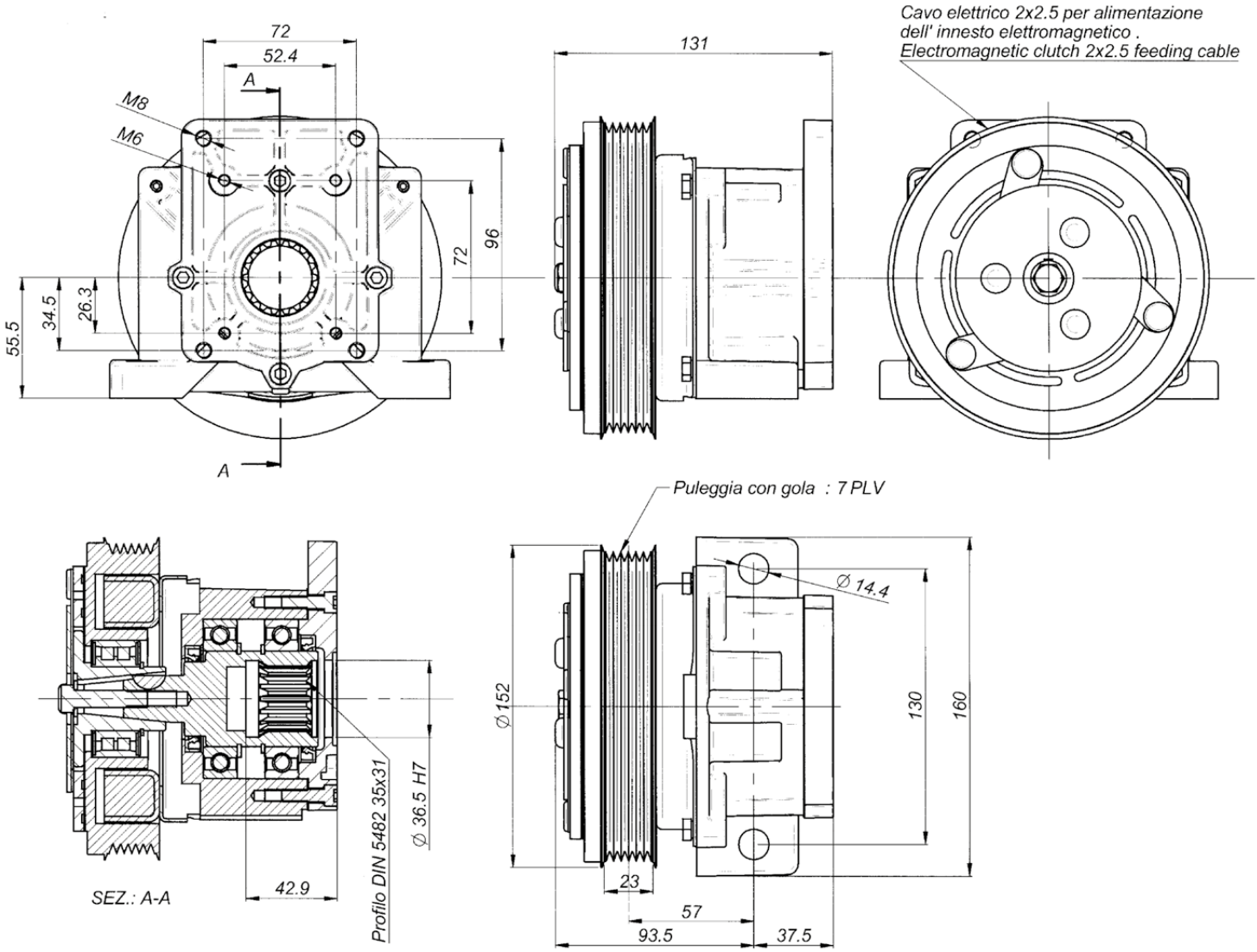

Nominal torque	11,8 daNm		Connection time	25 m/sec
Static torque	14,0 daNm		Disconnection time	40 m/sec
Dynamic torque	12,5 daNm	at 500 rpm	Minimun time between two connection	20 sec
	11,0 daNm	at 1000 rpm		
	8,2 daNm	at 1500 rpm		
	7,5 daNm	at 2000 rpm		
	6,7 daNm	at 2500 rpm	Max speed	5000 rpm
	6,5 daNm	at 3000 rpm	Weight	5,5 Kg

Electric absorption	Resistance (Ω)		Current (A)		Power (W)	
	20° C	120° C	20° C	120° C	20° C	120° C
12 V DC	4,00	5,60	3,33	2,00	40,00	24,00
24 V DC	20,00	28,00	1,26	0,77	30,30	18,18

All technical data are at 20°C / at 120 °C the performance are less 20%
All electromagneteic clutches are reversible.

• FLANGE PER INNESTI ELETTROMAGNETICI 14 daNm PLV
• BRIDE POUR EMBRAYAGES ELECTROMAGNETIQUE 14 daNm PLV
• FLANGES FOR ELECTROMAGNETIC COUPLING 14 daNm PLV
• FLANSCHE FUR ELEKTROMAGNETISCHE SCHALTKUPPLUNGEN 14 daNm PLV

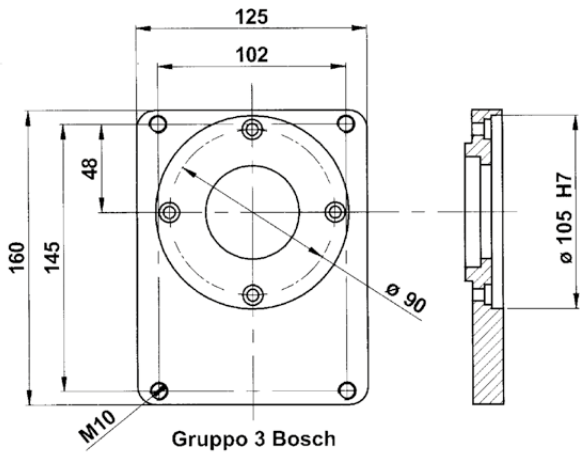

Gruppo 3 Bosch
30821

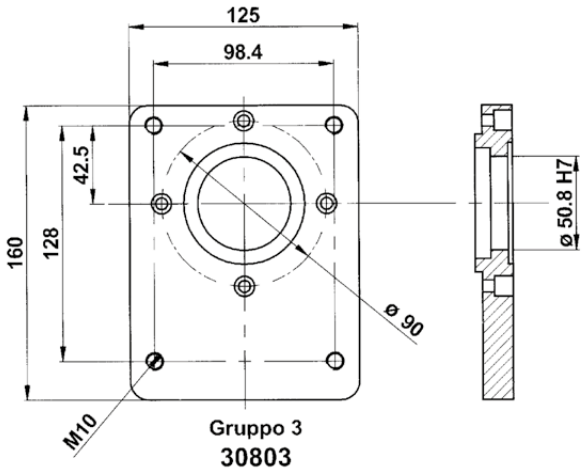

Gruppo 3
30803

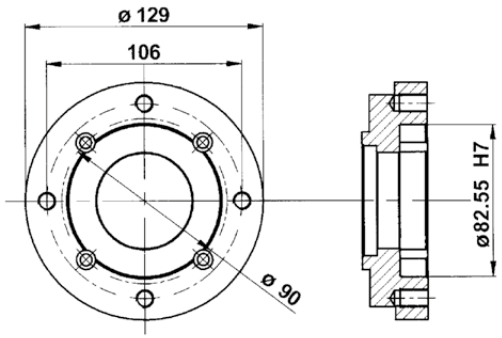

SAE A
30420.3

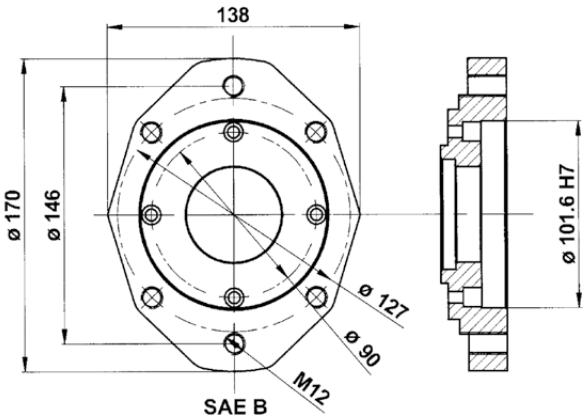

SAE B
30420.1

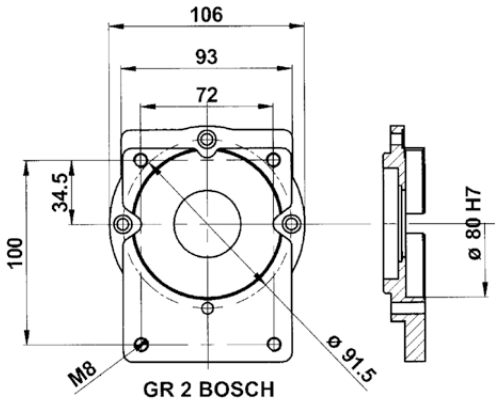

GR 2 BOSCH
30817

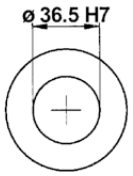

920266

CODICE, CODE, CODE No., CODENUMMER					
Electric absorption	FLANGIA: TIPO, BRIDE: TYPE, FLANGE: TYPE, FLANSCHTYPE				
	Gr.2 BOSCH	Gr.3	Gr. 3 BOSCH	SAE A	SAE B
12 Volt	30929-1/2B	30931-1	30931-1/3B	30929-1/SA	30929-1/SB
24 Volt	30930-1/2B	30932-1	30932-1/3B	30930-1/SA	30930-1/SB

• TAVOLA RICAMBI INNESTO ELETTROMAGNETICO 21daNm

• TABLEAU DES PIECES DETACHEES POUR EMBRAYAGE ELECTROMAGNETIQUE 21daNm

• SPARE PARTS TABLE FOR ELECTROMAGNETIC COUPLING 21daNm

• ERSAZTEILLISTE FUR ELEKTROMAGNETISCHE SCHALTKUPPLUNGEN 21daNm

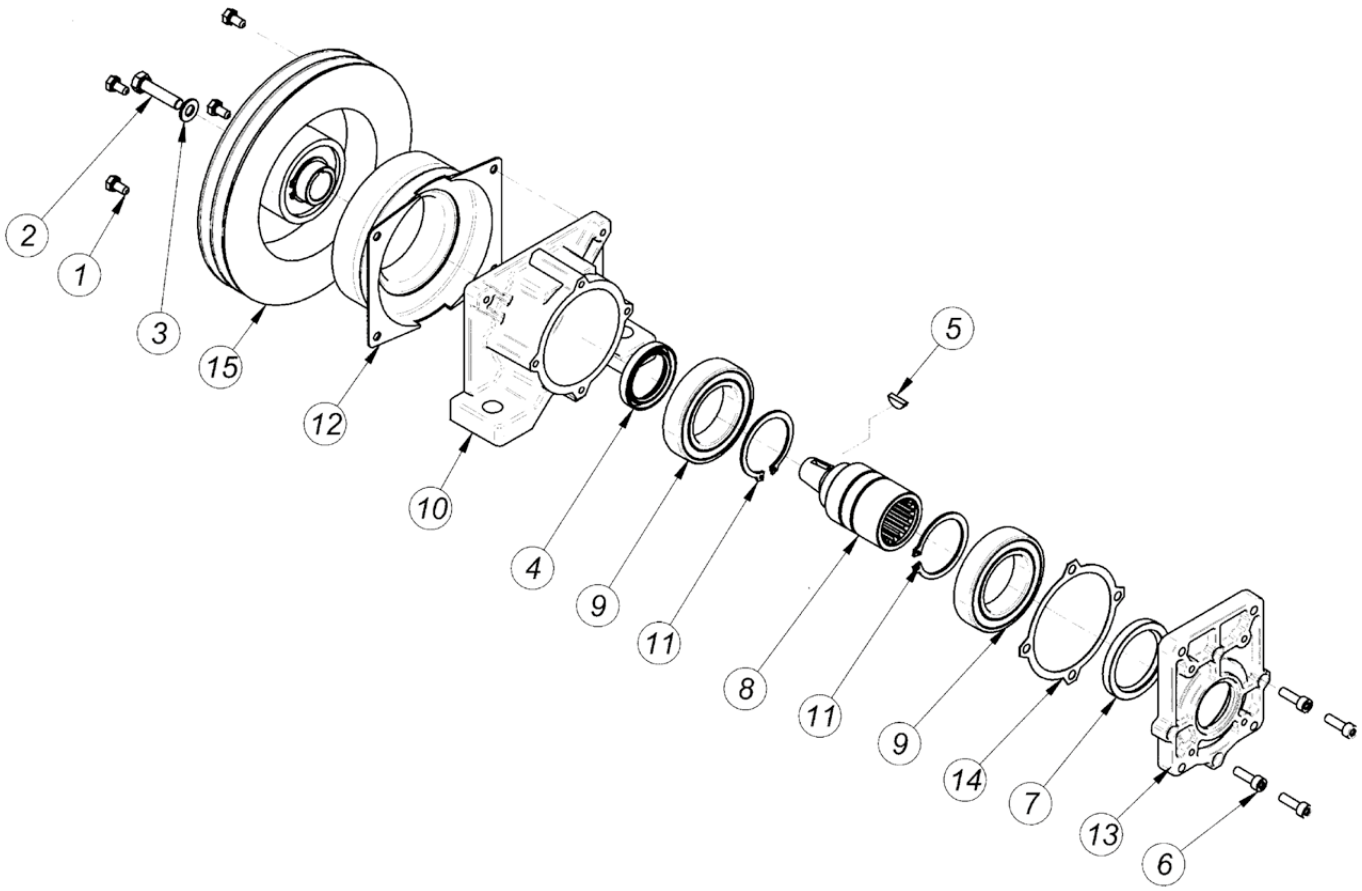

Pos.	CODICE	DENOMINAZIONE	DENOMINATION	DESCRIPTION	BEZEICHNUNG	Q.TA'
1	611428	Vite EN 24017 M6x12	Vis EN24017 M6x12	Soket EN 24017 M6x12	Befestigungsschraube EN 24017 M6x12	4
2	610516	Vite EN 24017 M8x35	Vis EN 24017 M8x35	Socket EN 24017 M8x35	Befestigungsschraube EN 24017 M8x35	1
3	RSPAL8	Rosetta per M8	Rondelle D.8	Washer d.8	Rosette durchm 8	1
4	303550	Anello di tenuta 35x50x7	Bague d'etancheite 35x50x7	Sealing ring 35x50x7	Dichtring 35x50x7	1
5	700465	Linguetta UNI 6606 4x6.5	Languette UNI 6606 4x6.5	Woodruff key UNI 6606 4x6.5	Halbrundkeil UNI 6606 4x6.5	1
6	610620	Vite T.C.E.I M6x20	Vis T.C.H.C. M6x20	Socket capscrew M6x20	Befestigungsschraube UNI 5931 M6x20	4
7	304560	Anello di tenuta 45x60x7	Bague d'etancheite 45x60x7	Sealing ring 45x60x7	Dichtring 45x60x7	1
8	A30901	Albero	Arbre	Shaft	Welle	1
9	506009/2Z	Cuscinetto 6009 2rs	Palier SKF 6009 2RS	Bearing SKF 6009 2RS	Kugellager SKF 6009-2RS	2
10	30009.1	Scatola	Carcasse	Housing	Gehause	1
11	904500	Anello elastico d.45	Circlip d.45	Snap ring d.45	Seegerring d.45	2
12	401221/186B 402421/186B	Bobina	Bobine	Coil	Zundspüle	1
13	30900.1	Flangia per pompe Gr 1 - 2	Flasque puor pompes Gr 1 - 2	Flange for pumps Gr 1 - 2	Flansch fur pumpe Gr 1- 2	1
14	30009.1.1	Guarnizione	Joint	Gasket	Dichtung	1
15	4021/186BP	Elettrofrizione PLV	Electro-embrayage PLV	Electric clutch PLV	Elektroschaltkpplung PLV	1

• INNESTO ELETTROMAGNETICO 21daNm
• EMBRAYAGE ELECTROMAGNETIQUE 21daNm
• ELECTROMAGNETIC COUPLING 21daNm
• ELEKTROMAGNETISCHE SCHALTKUPPLUNGEN 21daNm

SERIE: 30990 12 Volt
SERIE: 30991 24 Volt

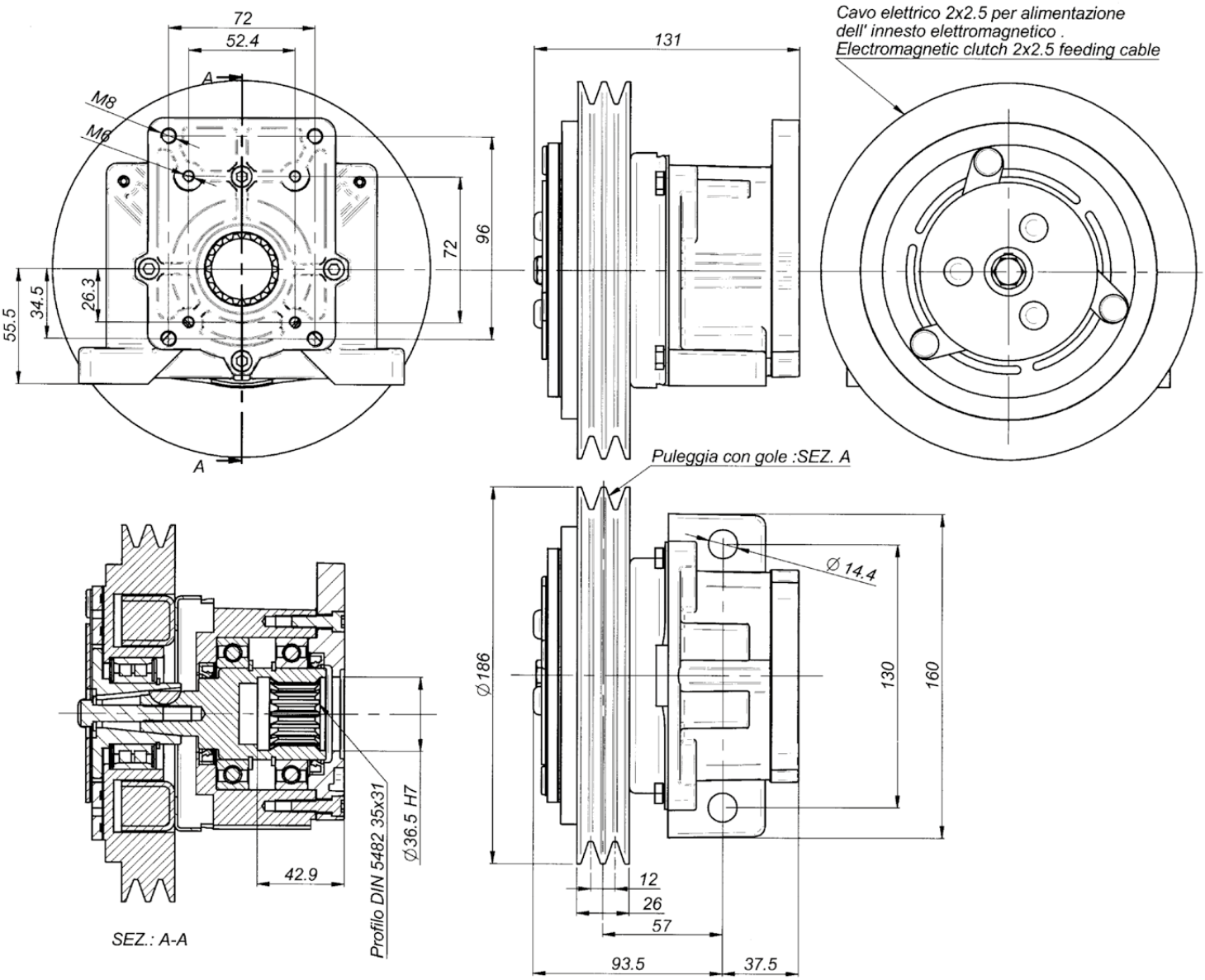

Nominal torque	16,0 daNm		Connection time	25 m/sec
Static torque	21,0 daNm		Disconnection time	40 m/sec
Dynamic torque	14,5 daNm	at 500 rpm	Minimun time between two connection	20 sec
	12,0 daNm	at 1000 rpm		
	9,5 daNm	at 1500 rpm		
	8,8 daNm	at 2000 rpm		
	8,0 daNm	at 2500 rpm	Max speed	5000 rpm
	7,8 daNm	at 3000 rpm	Weight	8 Kg

Electric absorption	Resistance (Ω)		Current (A)		Power (W)	
	20° C	120° C	20° C	120° C	20° C	120° C
12 V DC	2,96	3,97	4,05	2,71	48,70	32,50
24 V DC	12,30	16,60	1,95	1,31	47,00	30,70

All technical data are at 20°C / at 120 °C the performance are less 20%
All electromagneteic clutches are reversible.

• FLANGE PER INNESTI ELETTROMAGNETICI 21 daNm
• BRIDE POUR EMBRAYAGES ELECTROMAGNETIQUE 21 daNm
• FLANGES FOR ELECTROMAGNETIC COUPLING 21 daNm
• FLANSCHE FUR ELEKTROMAGNETISCHE SCHALTKUPPLUNGEN 21 daNm

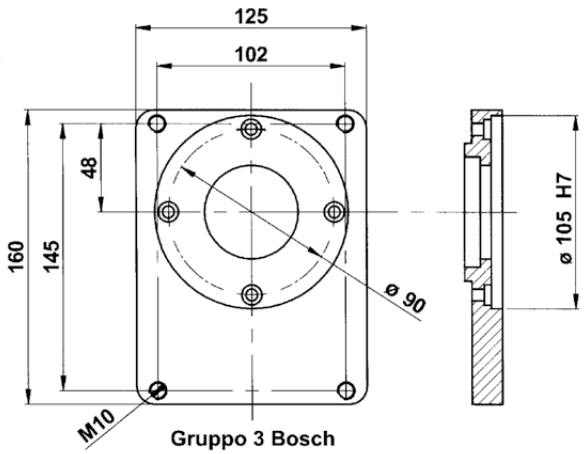

Gruppo 3 Bosch
30821

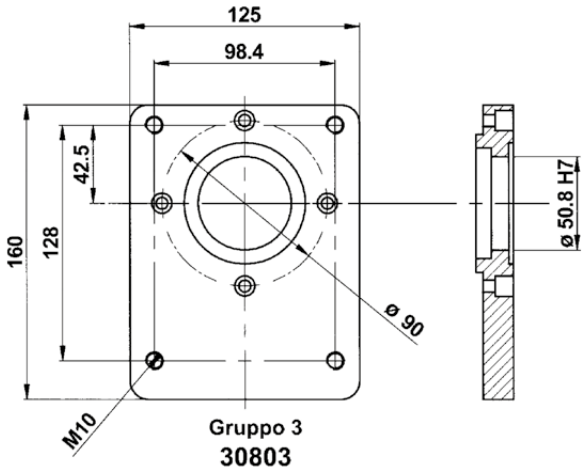

Gruppo 3
30803

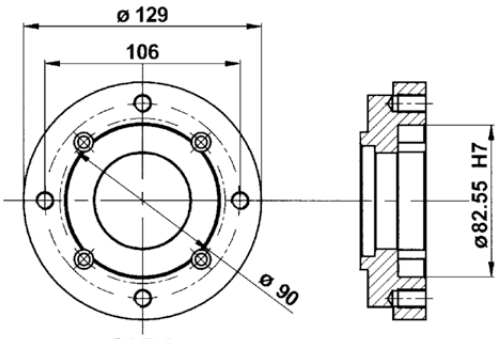

SAE A
30420.3

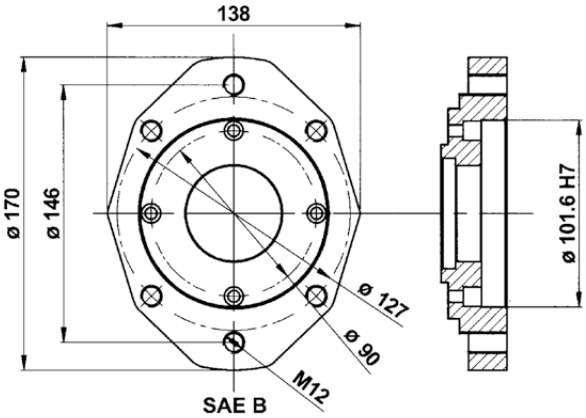

SAE B
30420.1

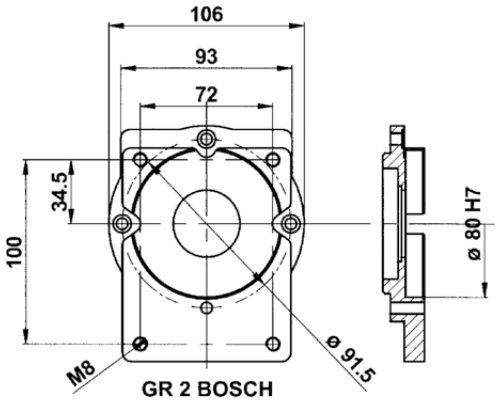

GR 2 BOSCH
30817

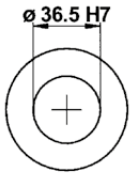

920266

CODICE, CODE, CODE No., CODENUMMER					
Electric absorption	FLANGIA: TIPO, BRIDE: TYPE, FLANGE: TYPE, FLANSCHTYPE				
	Gr.2 BOSCH	Gr.3	Gr. 3 BOSCH	SAE A	SAE B
12 Volt	30990/2B	30992	30992/3B	30990/SA	30990/SB
24 Volt	30991/2B	30993	30993/3B	30991/SA	30991/SB

• TAVOLA RICAMBI INNESTO ELETTROMAGNETICO 50daNm
• TABLEAU DES PIECES DETACHEES POUR EMBRAYAGE ELECTROMAGNETIQUE 50daNm
• SPARE PARTS TABLE FOR ELECTROMAGNETIC COUPLING 50daNm
• ERSAZTEILLISTE FUR ELEKTROMAGNETISCHE SCHALTKUPPLUNGEN 50daNm

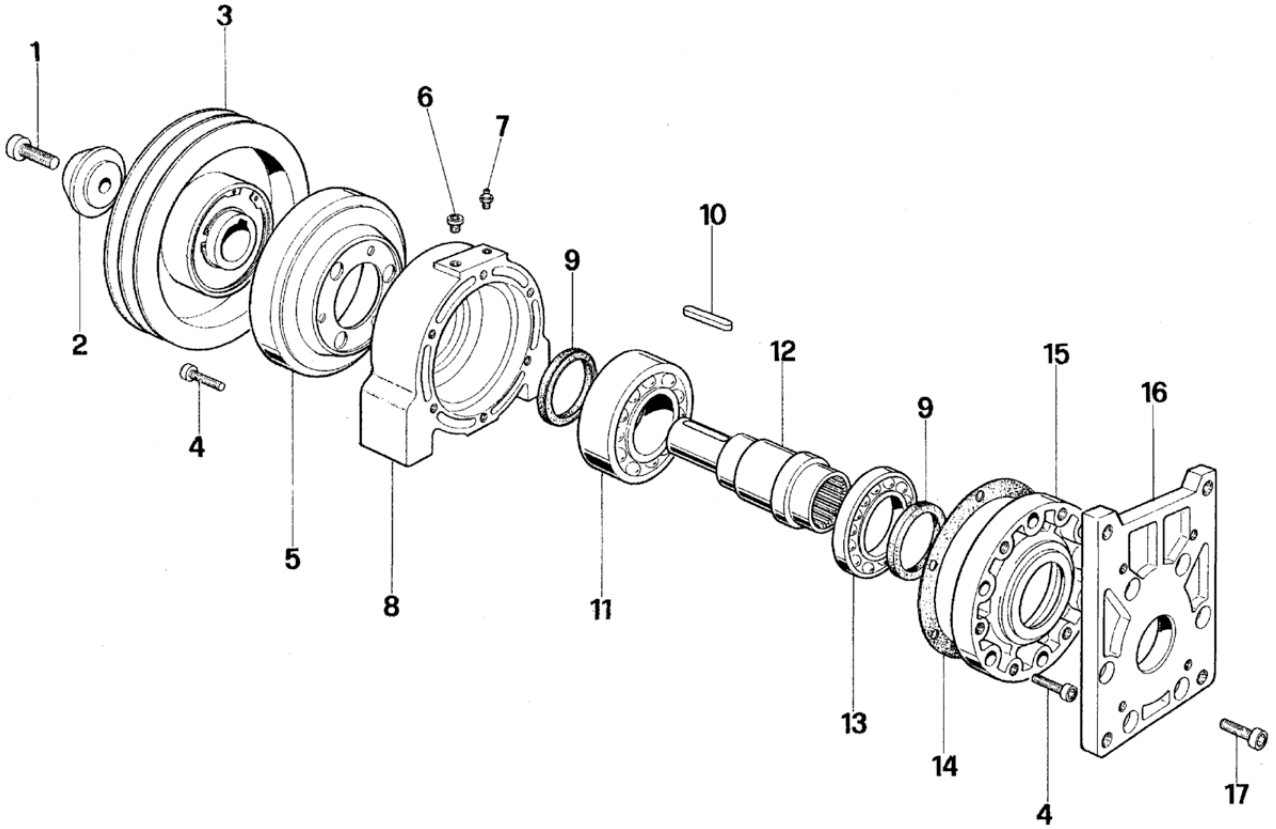

POS.	CODICE	DENOMINAZIONE	DENOMINATION	DESCRIPTION	BEZEICHNUNG	Q.TA'
1	611645	Vite T.C.E.I. M16x45	Vis T.C.H.C. M16x45	Socket capscrew M16x45	Befestigungsschraube UNI 5931 M16x45	1
2	RSP016	Rondella speciale D.16	Special rondelle d.16	Special washer d.16	Rosette d.16	1
3	4050/229BP	Elettrofrizione	Electro-embrayage	Electric clutch	Elektroschaltkupplung	1
4	611020	Vite T.C.E.I. M10x20	Vis T.C.H.C. M10x20	Socket capscrew M10x20	Befestigungsschraube UNI 5931 M10x20	3
5	401250/229B 402450/229B	Bobina	Bobine	Coil	Zundspüle	1
6	940182	Tappo scarico olio 1/8" G	Bouchon vindage huile 1/8"G	Oil drain plug 1/8"G	Olablabschraube 1/8"G	1
7	500000.1	Ingrassatore M8x1.25	Graisseur M8x1.25	Grease nipple M8x1.25	Fettbuchse M8x1.25	1
8	30009.30	Scatola	Carcasse	Housing	Gehuase	1
9	306075	Anello di tenuta 60x75x8	Bague d'etancheite 60x75x8	Sealing ring 60x75x8	Dichtring , durchm. 60x75x8	2
10	421086	Chiavetta 10x8x60 UNI 6604	Clavette 10x8x60 UNI 6604	Key 10x8x60 UNI 6604	Keil 10x8x60 UNI 6604	1
11	503212/Z	Cuscinetto 3212 A	Pallier 3212 A	Bearing 3212 A	Kugellager 3212 A	1
12	Ac30940	Albero	Arbre	Shaft	Welle	1
13	501601/Z	Cuscinetto 16012 A	Pallier 16012 A	Bearing 16012 A	Kugellager 16012 A	1
14	30470.2	Guarnizione	Joint	Gasket	Dichtung	1
15	30470	Flangia circolare	Bride circulaire	Round flange	Runder flansch	1
16	30900.1	Flangia pompa	Bride	Flange	Flansch	1
17	611025	Vite T.C.E.I. M10x25	Vis T.C.H.C. M10x25	Socket capscrew M10x25	Befestigungsschraube UNI 5931 M10x25	6

SERIE: 30940/SF 12 Volt
SERIE: 30941/SF 24 Volt

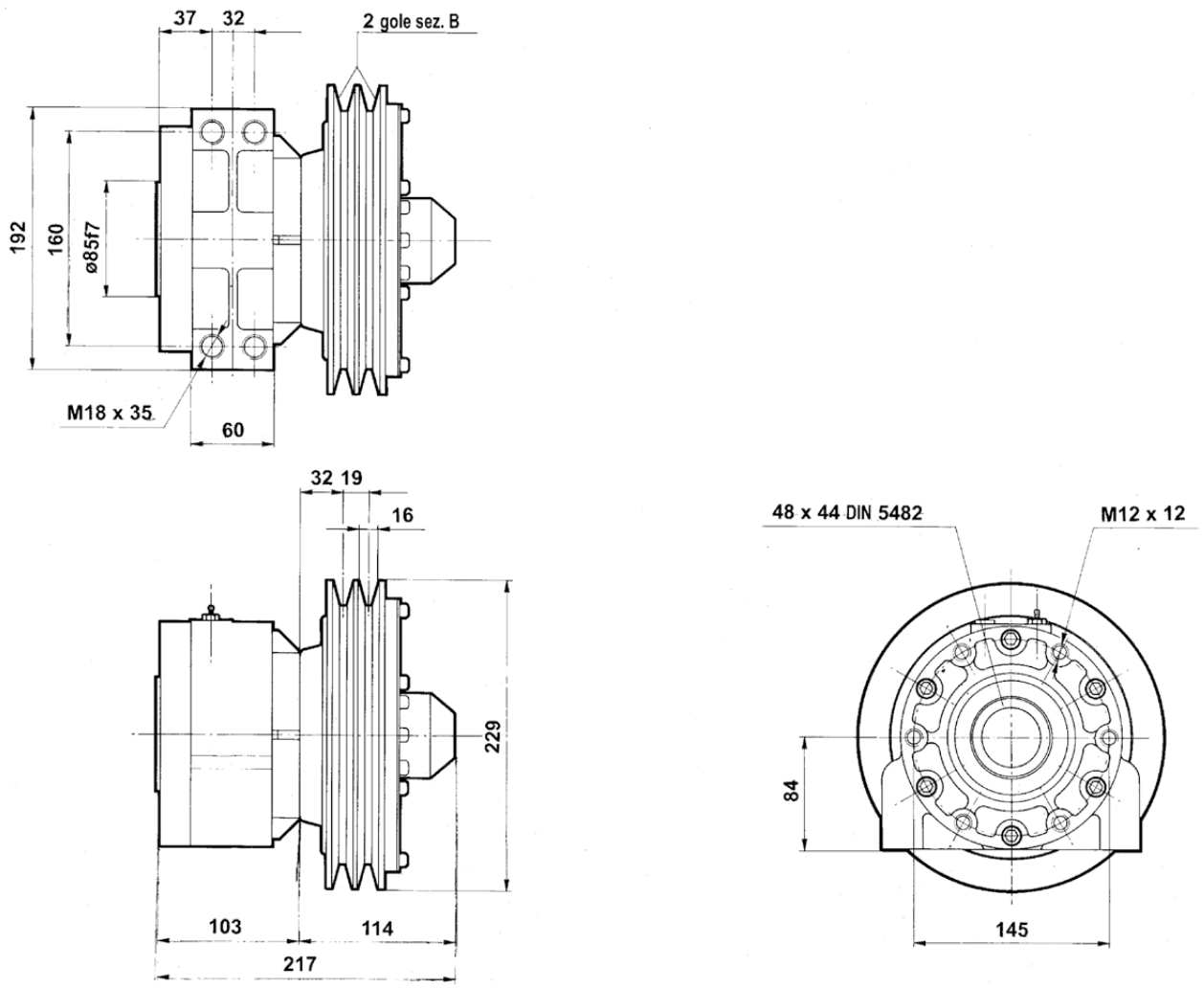

Nominal torque	38,0 daNm		Connection time	25 m/sec
Static torque	50,0 daNm		Disconnection time	40 m/sec
Dynamic torque	33,0 daNm	at 500 rpm	Minimun time between two connection	20 sec
	31,5 daNm	at 1000 rpm		
	28,7 daNm	at 1500 rpm		
	28,0 daNm	at 2000 rpm		
	27,2 daNm	at 2500 rpm	Max speed	5000 rpm
	27,0 daNm	at 3000 rpm	Weight	20 Kg

Electric absorption	Resistance (Ω)		Current (A)		Power (W)	
	20° C	120° C	20° C	120° C	20° C	120° C
12 V DC	1,81	2,60	6,60	4,62	80,00	56,00
24 V DC	7,40	10,50	3,25	2,30	78,00	54,60

All technical data are at 20°C / at 120 °C the performance are less 20%
All electromagneteic clutches are reversible.

• FLANGE PER INNESTI ELETTROMAGNETICI 50 daNm
• BRIDE POUR EMBRAYAGES ELECTROMAGNETIQUE 50 daNm
• FLANGES FOR ELECTROMAGNETIC COUPLING 50 daNm
• FLANSCHE FUR ELEKTROMAGNETISCHE SCHALTKUPPLUNGEN 50 daNm

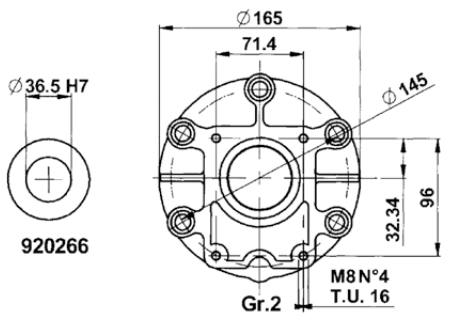

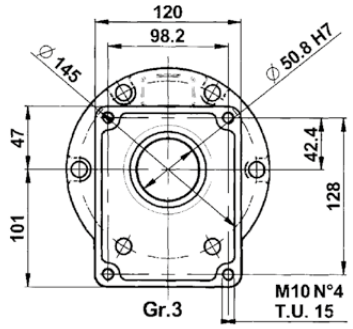

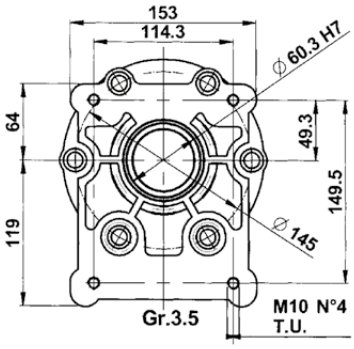

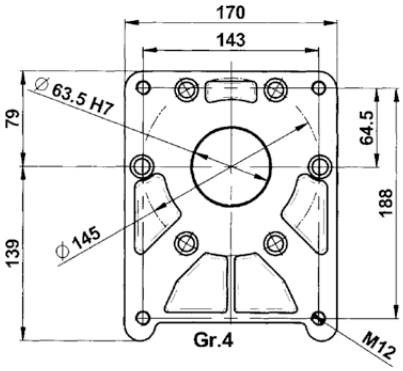

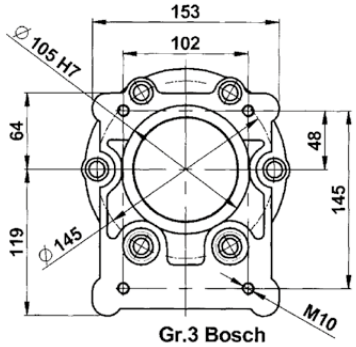

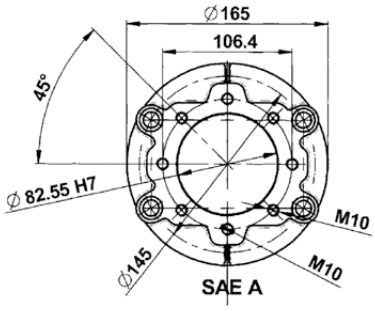

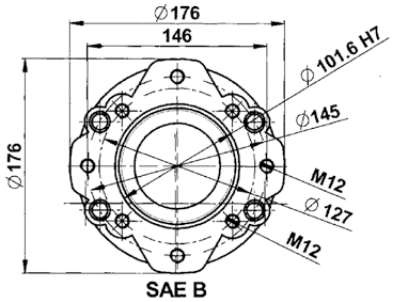

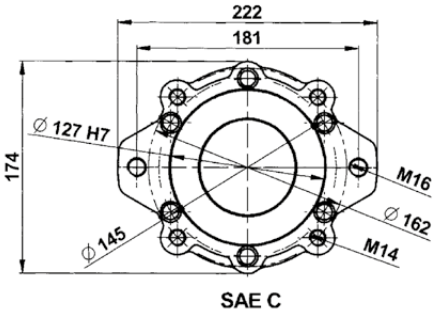

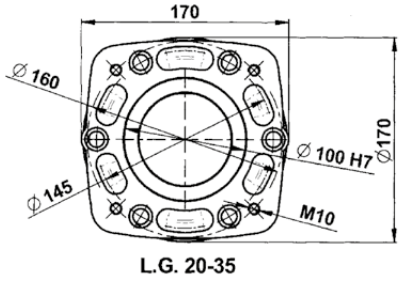

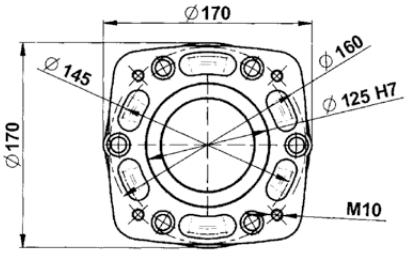

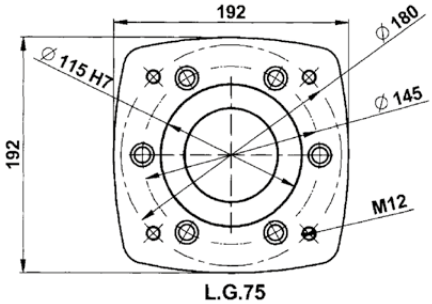

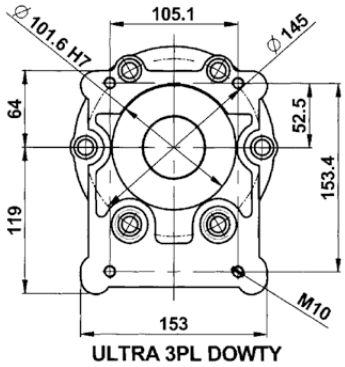

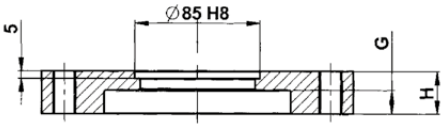

Flangia :Tipo Bride : Type Flange : Type Flanschtype	Gr.2	Gr.3	Gr.3.5	Gr.4	Gr.3 BOSCH	SAE A	SAE B	SAE C	L.G. 20-35	L.G. 50	L.G.75	ULTRA 3PL DOWTY
H	21	23	24	23	19	25	25	28	34	41	41	24.5
G	17	21	11.5	16	12	21	12	16	25	32.5	33	10.5
Codice flangia Code bride Code N. flange Codenummer flanschtype	30400	30401	30402	30403	30417	30420	30422	30432	30461	30462	30463	30471

• TAVOLA RICAMBI INNESTO ELETTROMAGNETICO 3daNm

• TABLEAU DES PIECES DETACHEES POUR EMBRAYAGE ELECTROMAGNETIQUE 3 daNm

• SPARE PARTS TABLE FOR ELECTROMAGNETIC COUPLING 3 daNm

• ERSATZTEILLISTE FUR ELEKTROMAGNETISCHE SCHALTKUPPLUNGEN 3daNm

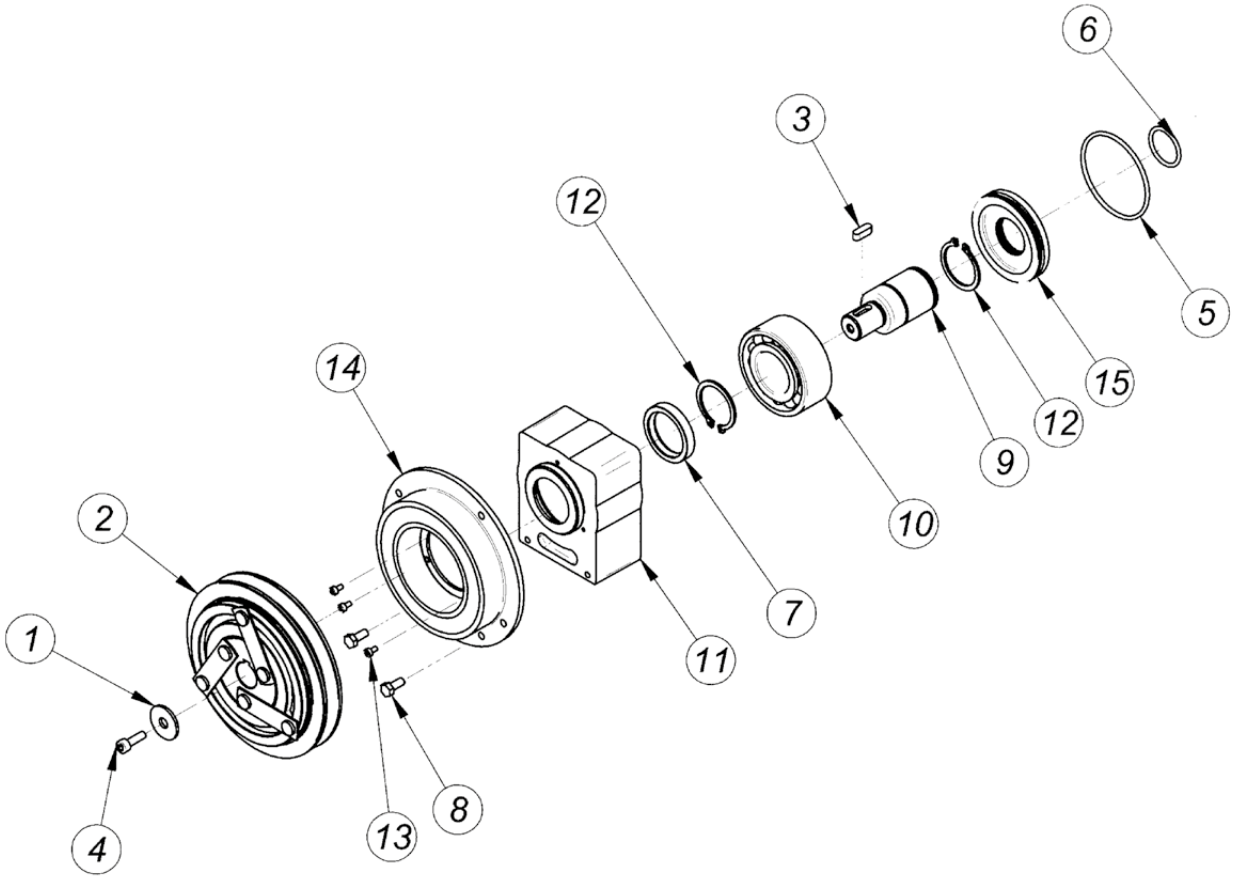

Pos.	CODICE	DENOMINAZIONE	DENOMINATION	DESCRIPTION	BEZEICHNUNG	Q.TA'
1	RSP246	Rosetta UNI 6593 - 6x24x2	Rondelle UNI 6593 - 6x24x2	Washer UNI 6593 - 6x24x2	Rosette UNI 6593 - 6x24x2	1
2	4003/125BP	Puleggia elettrofrizione	Poulie embrayage électrique	Electric clutch pulley	Elektroschaltkupplungsscheibe	1
3	435515	Linguetta UNI 6604 A 5x5x20	Languette UNI 6604 5x5x20	Woudruff key UNI 6604 5x5x20	Halbrundkeil UNI 6604 5x5x20	1
4	610620	VTCEI UNI 5931 M6x12	Vis TCHC UNI 5931 M6x12	Socket capscrew UNI 5931 M6x12	Befestigungsschraube UNI 5931 M6x12	1
5	403225	Anello OR D.60	Bague torique d.60	O-Ring d.60	O-Ring d.60	1
6	402100	Anello OR	Bague torique	O-Ring	O-Ring	1
7	303040	Anello di tenuta 30x40x7	Bague d'etancheite 30x40x7	Sealing ring 30x40x7	Dichtring 30x40x7	1
8	620512	Vite EN 24017 M5x12	Vis EN 24017 M5x12	Socket EN 24017 M5x12	Befestigungsschraube EN 24017 M5x12	2
9	AC30900	Albero	Arbre	Shaft	Welle	1
10	503206	Cuscinetto SKF 3206	Palier SKF 3206	Bearing SKF 3206	Kugellager SKF 3206	1
11	30009-3/V	Scatola	Carcasse	Housing	Gehause	1
12	903000	Anello elastico UNI 7436 - 25	Circlip UNI 7436 - 25	Snap ring UNI 7436 - 25	Seegerring UNI 7436 - 25	2
13	610306	VITE UNI 5931 M3x6	Vis T.C.H.C M3x6 UNI 5931	Socket capscrew M3x6 UNI 5931	Zylinderkopfschraube mit innensechskant M3x6 UNI 5931	3
14	401203/125B 402403/125B	Bobina	Bobine	Coil	Zundspüle	1
15	COP-062	Anello	Bague	Ring	Ring	1

• INNESTO ELETTROMAGNETICO 3 daNm
• EMBRAYAGE ELECTROMAGNETIQUE 3 daNm
• ELECTROMAGNETIC COUPLING 3 daNm
• ELEKTROMAGNETISCHE SCHALTKUPPLUNGEN 3 daNm

SERIE: °30900-1 12 Volt
SERIE: °30900-2 24 Volt

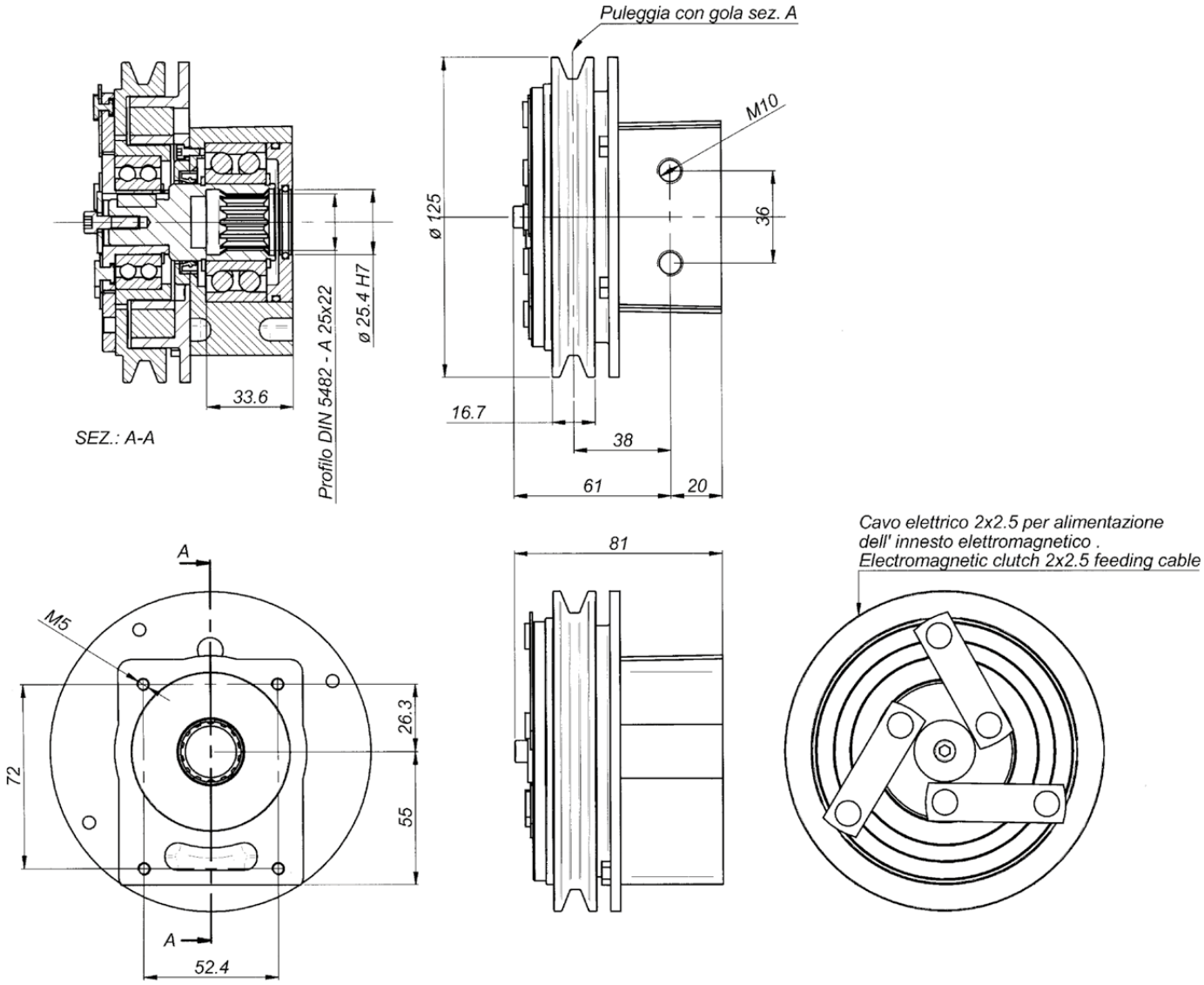

Nominal torque	3,0 daNm		Connection time	25 m/sec
Static torque	4,5 daNm		Disconnection time	40 m/sec
Dynamic torque	3,2 daNm	at 500 rpm	Minimun time between two connection	20 sec
	2,8 daNm	at 1000 rpm		
	1,7 daNm	at 1500 rpm		
	1,4 daNm	at 2000 rpm		
	1,2 daNm	at 2500 rpm	Max speed	5000 rpm
	0,9 daNm	at 3000 rpm	Weight	3 Kg

Electric absorption	Resistance (W)		Current (A)		Power (W)	
	20° C	120° C	20° C	120° C	20° C	120° C
12 V DC	5,7	7,9	2,1	1,6	25,2	18
24 V DC	21,7	30,7	1,1	0,8	26,5	19

All technical data are at 20°C / at 120° C the performance are less 20%
All electromagneteic clutches are reversible.

I nostri cataloghi

DOVE SIAMO

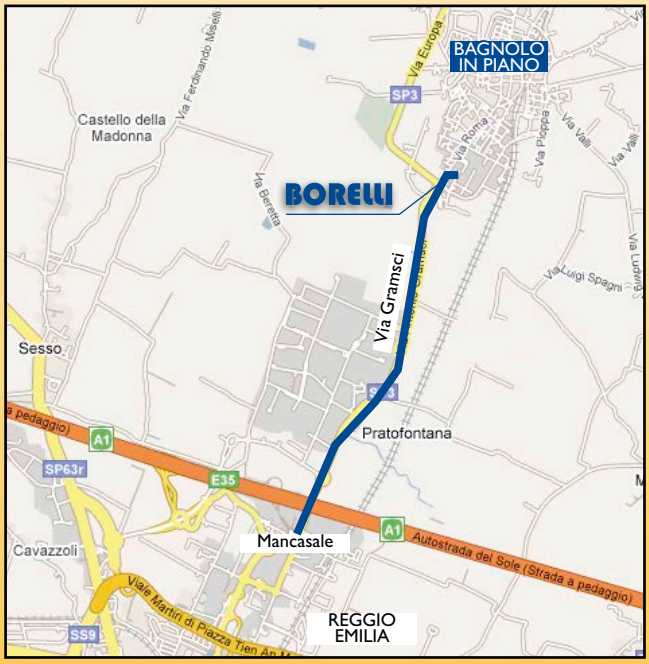

OLEODINAMICA BORELLI
HYDRAULIC COMPONENTS

OLEODINAMICA BORELLI
di Borelli Claudio

VIA GALVANI, 2 • 42011 BAGNOLO IN PIANO (RE)
TEL. +39.0522.951628-952080 • FAX +39.0522.951238
www.oleodinamicaborelli.it • info@oleodinamicaborelli.it